Juice Dispensers

Items 19478, 19479, 19480

Instruction Manual

STOP

DO NOT RETURN THIS PRODUCT TO THE STORE

For questions or assistance with this product call OMCAN Toll Free:
1 800 465 0234
Customer Service
or
visit the Support section of
www.omcan.com

Revised - 10/23/2026

Toll Free: 1-800-465-0234
Fax: 905-607-0234
Email: service@omcan.com
www.omcan.com

MADE IN CHINA

Table of Contents

Item 19478 / Item 19479 / Item 19480

Section	Page
General Information	3 - 4
Safety and Warranty	4 - 5
Technical Specifications	5
Installation and Operation	5 - 6
Maintenance	6
Parts Breakdown	7 - 10
Warranty Registration	11

General Information

Omcan Manufacturing and Distributing Company Inc., Food Machinery of America, Inc. dba Omcan and Omcan Inc. are not responsible for any harm or injury caused due to any person's improper or negligent use of this equipment. The product shall only be operated by someone over the age of 18, of sound mind, and not under the influence of any drugs or alcohol, who has been trained in the correct operation of this machine, and is wearing authorized, proper safety clothing. Any modification to the machine voids any warranty, and may cause harm to individuals using the machine or in the vicinity of the machine while in operation.

CHECK PACKAGE UPON ARRIVAL

Upon receipt of an Omcan shipment please inspect for external damage. If no damage is evident on the external packaging, open carton to ensure all ordered items are within the box, and there is no concealed damage to the machine. If the package has suffered rough handling, bumps or damage (visible or concealed), please note it on the bill of lading before accepting the delivery and contact Omcan within 24 hours, so we may initiate a claim with the carrier. A detailed report on the extent of the damage caused to the machine must be filled out within three days, from the delivery date shown in the shipping documents. Omcan has no recourse for damaged products that were shipped collect or third party.

Before operating any equipment, always read and familiarize yourself with all operation and safety instructions.

Omcan would like to thank you for purchasing this machine. It's of the utmost importance to save these instructions for future reference. Also save the original box and packaging for shipping the equipment if servicing or returning of the machine is required.

Omcan Fabrication et distribution Companie Limité et Food Machinery d'Amerique, dba Omcan et Omcan Inc. ne sont pas responsables de tout dommage ou blessure causé du fait que toute personne ait utilisé cet équipement de façon irrégulière. Le produit ne doit être exploité que par quelqu'un de plus de 18 ans, saine d'esprit, et pas sous l'influence d'une drogue ou d'acohol, qui a été formé pour utiliser cette machine correctement, et est vêtu de vêtements de sécurité approprié. Toute modification de la machine annule toute garantie, et peut causer un préjudice à des personnes utilisant la machine ou des personnes à proximité de la machine pendant son fonctionnement.

VÉRIFIEZ LE COLIS DÈS RÉCEPTION

Dès réception d'une expédition d'Omcan veuillez inspecter pour dommages externes. Si aucun dommage n'est visible sur l'emballage externe, ouvrez le carton afin de s'assurer que tous les éléments commandés sont dans la boîte, et il n'y a aucun dommage dissimulé à la machine. Si le colis n'a subi aucune mauvaises manipulations, de bosses ou de dommages (visible ou cachée), notez-le sur le bond de livraison avant d'accepter la livraison et contactez Omcan dans les 24 heures qui suivent, pour que nous puissions engager une réclamation auprès du transporteur. Un rapport détaillé sur l'étendue des dommages causés à la machine doit être rempli dans un délai de trois jours, à compter de la date de livraison indiquée dans les documents d'expédition. Omcan n'a aucun droit de recours pour les produits endommagés qui ont été expédiées ou cueilli par un tiers transporteur.

General Information

Avant d'utiliser n'importe quel équipement, toujours lire et vous familiariser avec toutes les opérations et les consignes de sécurité.

Omcan voudrais vous remercier d'avoir choisi cette machine. Il est primordial de conserver ces instructions pour une référence ultérieure. Également conservez la boîte originale et l'emballage pour l'expédition de l'équipement si l'entretien ou le retour de la machine est nécessaire.

Omcan Empresa De Fabricacion Y Distribucion Inc. Y Maquinaria De Alimentos De America, Inc. dba Omcan y Omcan Inc. no son responsables de ningun daño o perjuicío causado por cualquier persona inadecuada o el uso descuidado de este equipo. El producto solo podra ser operado por una persona mayor de 18 años, en su sano juicio y no bajo alguna influencia de droga o alcohol, y que este ha sido entrenado en el correcto funcionamiento de esta máquina, y ésta usando ropa apropiada y autorizada. Cualquier modificación a la máquina anúla la garantía y puede causar daños a las personas usando la máquina mientras esta en el funcionamiento.

REVISE EL PAQUETE A SU LLEGADA

Tras la recepcion de un envio Omcan favor inspeccionar daños externos. Si no hay daños evidentes en el empaque exterior, Habra el carton para asegurararse que todos los articulos solicitados ésten dentro de la caja y no encuentre daños ocultos en la máquina. Si el paquete ha sufrido un manejo de poco cuidado, golpes o daños (visible o oculto) por favor anote en la factura antes de aceptar la entrega y contacte Omcan dentro de las 24 horas, de modo que podamos iniciar una reclamación con la compañia. Un informe detallado sobre los daños causados a la máquina debe ser llenado en el plazo de tres días, desde la fecha de entrega que se muestra en los documentos de envío. Omcan no tiene ningun recurso por productos dañados que se enviaron a recoger por terceros.

Antes de utilizar cualquier equipo, siempre lea y familiarizarse con todas las instrucciones de funcionamiento y seguridad.

Omcan le gustaría darle las gracias por la compra de esta máquina. Es de la mayor importancia para salvar estas instrucciones para futuras consultas. Además, guarda la caja original y el embalaje para el envío del equipo si servicio técnico o devolución de la máquina que se requiere.

Safety and Warranty

RESIDENTIAL USERS: Vendor assumes no liability for parts or labor coverage for component failure or other damages resulting from installation in non-commercial or residential applications. The right is reserved to deny shipment for residential usage; if this occurs, you will be notified as soon as possible.

6 MONTHS PARTS AND LABOUR BENCH WARRANTY

Safety and Warranty

Within the warranty period, contact Omcan Inc. At 1-800-465-0234 to schedule a drop off to either an Omcan authorized service depot in the area, or to an Omcan Service warehouse to repair the equipment.

Unauthorized maintenance will void the warranty. Warranty covers electrical and part failures, not improper use.

Please see https://omcan.com/disclaimer for complete info.

WARNING:

The packaging components are classified as normal solid urban waste and can therefore be disposed of without difficulty.

In any case, for suitable recycling, we suggest disposing of the products separately (differentiated waste) according to the current norms.

DO NOT DISCARD ANY PACKAGING MATERIALS IN THE ENVIRONMENT!

Technical Specifications

Item Number	**19478**	**19479**	**19480**
Type	Single	Double	Triple
Base	Silver Base		
Liquid Capacity	8 L / 8 QT	15 L / 16 QT	23 L / 24 QT
Distance Between Nozzle and Base	5.8” / 148mm		
Weight	8.8 lbs. / 4 kgs.	18.4 lbs. / 8.3 kgs.	28.2 lbs. / 13 kgs.
Packaging Weight	13 lbs. / 6 kgs.	25 lbs. / 11 kgs.	35 lbs. / 16 kgs.
Dimensions	15.4” x 11.1” x 21.7” 390 x 283 x 550mm	23.6” x 15.2” x 21.7” 600 x 385 x 550mm	35.4” x 15.2” x 21.7” 900 x 385 x 550mm
Packaging Dimensions	16” x 12” x 21” 406 x 305 x 533mm	24” x 16” x 21” 610 x 406 x 533mm	35” x 16” x 21” 889 x 406 x 533mm

Installation and Operation

Please check that all pieces are not damaged before assembly.

Installation and Operation

INSTALLATION

Simply follow the below instructions to assemble the juice dispenser:

1. Remove all pieces from the boxes and wrapping, making sure nothing is damaged.
2. Start by placing the base on a stable surface (the grates can be installed at any time).
3. Slide the plastic container with the tap onto the base, making sure that the tap fits snugly into the notch of the base.
4. Slide the ice tube into the notch of the center of the plastic container, making sure it is secure as possible. **Note: the ice tubes opening should be pointing up.**
5. Slide the circular brace onto the top of the plastic container, making sure that the ice tube fits snugly in the center.
6. The lid can now be placed on the top of the dispenser.
7. To disassemble, follow the above in reverse order.

OPERATION

Simply fill the ice tube with ice and the juice into the plastic container around the ice tube. The dispenser is ready to use.

Maintenance

CLEANING

Once operation is complete simply dispense as much of the leftover juice through the dispenser before disassembling for cleaning. To disassemble, see above. Use warm soapy water to clean all parts that come into contact with the juice. The grates can also be removed for cleaning. Rinse thoroughly and dry before reassembling.

CLEANING THE TAP

To clean the tap simply unscrew the tap from the container with a wrench and carefully remove the tap assembly for cleaning.

Note: When cleaning the tap assembly it is important to make sure that you keep track of all the small pieces as the tap will not operate correctly without them.

In a shallow container, fill with warm soapy water and submerge the tap assembly, allow the tap to soak for a few minutes and rinse thoroughly. Make sure the tap is completely dry before reassembling it on the plastic container.

Screw the assembly back into place once completely dry.

IF THERE ARE ANY ISSUES WITH THE UNIT, CALL OMCAN AT 1-800-465-0234.

Parts Breakdown

Item 19478

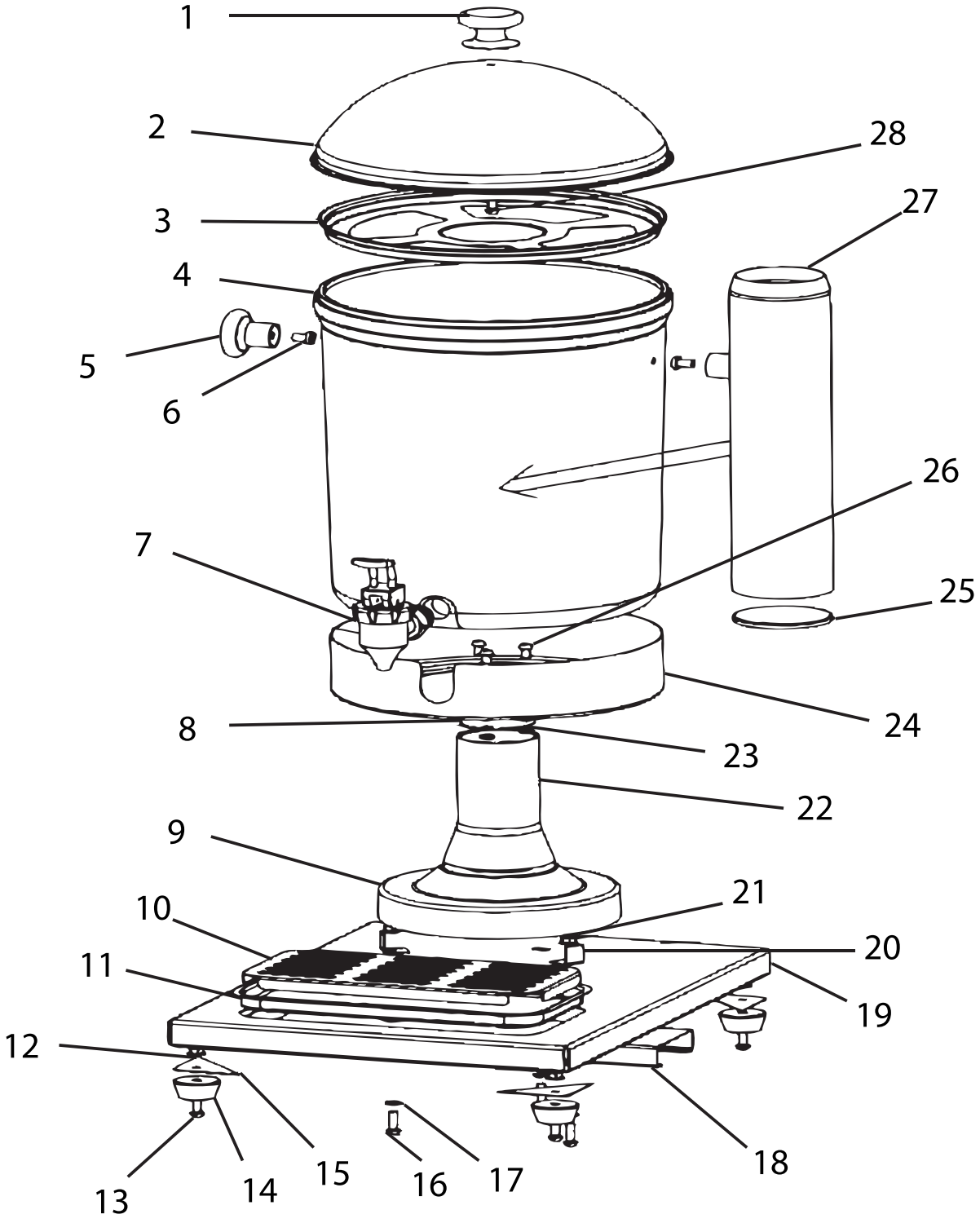

Parts Breakdown

Item 19479

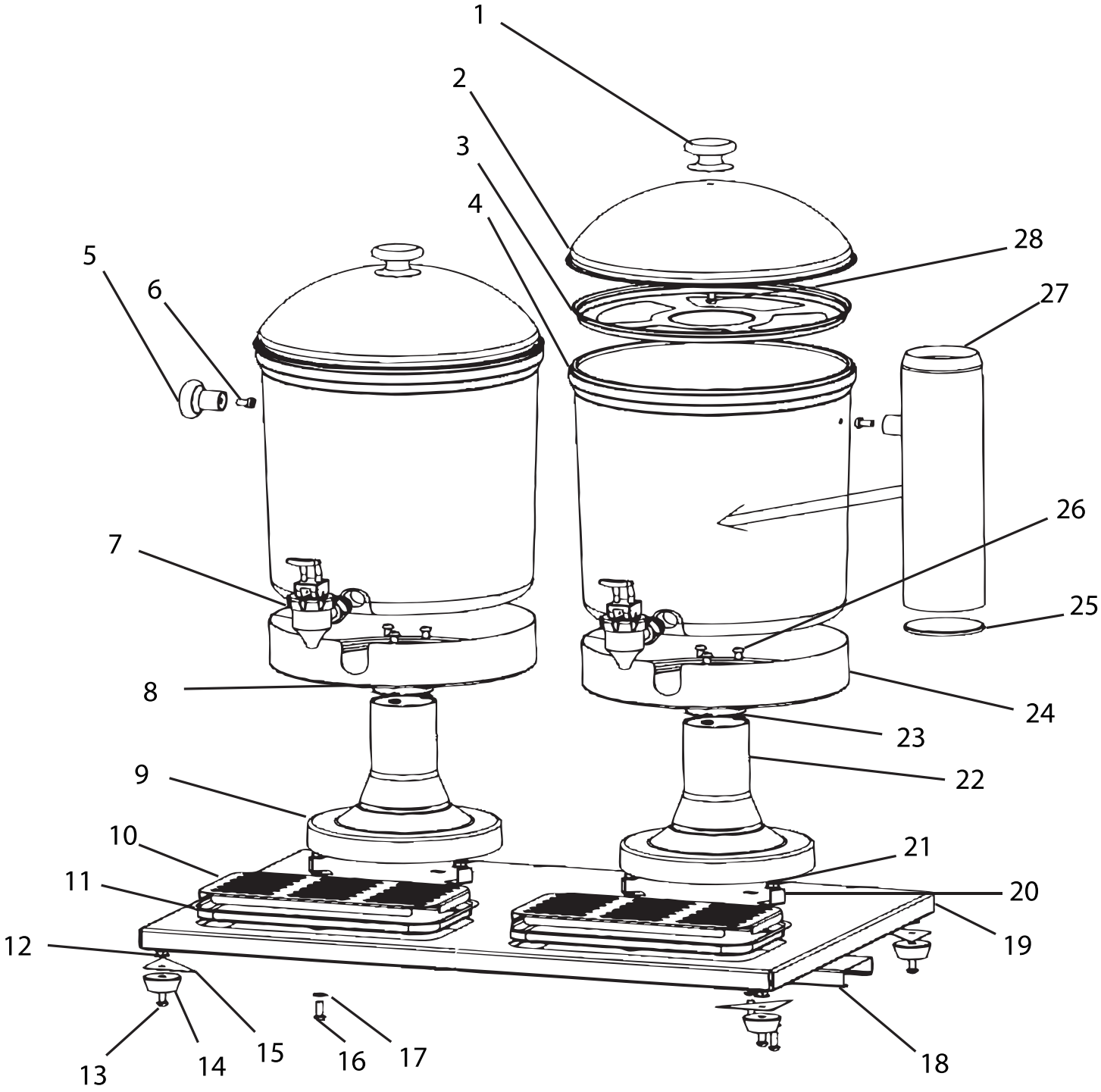

Parts Breakdown

Item 19480

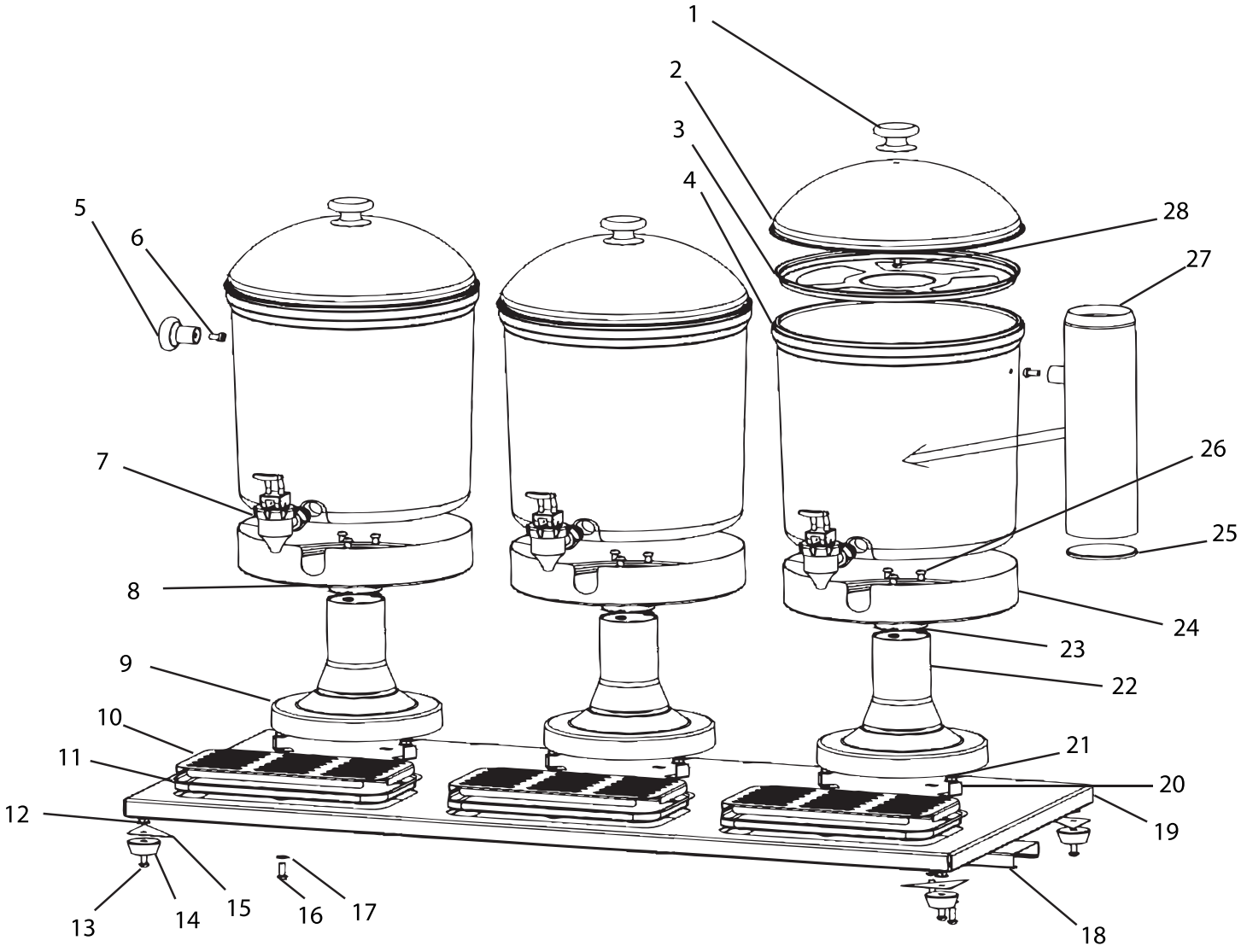

Parts Breakdown

Item 19478

Item No.	Description	Position
31472	Top Handlebar for 19478	1
31473	Lid for 19478	2
31474	Net for 19478	3
31475	PC Body for 19478	4
31476	Handlebar for 19478	5
31477	Small Screw for 19478	6
AX003	Tap for 19478	7
77969	Small Cover for 19478	8

Item No.	Description	Position
77976	Holder Seat Assembly for 19478	9
31478	Net Seat for 19478	10
31479	Water Seat for 19478	11
77970	F-Screw for 19478	12
77971	Nut for 19478	13
77972	Feet for 19478	14
77975	Board Assembly for 19478	15 - 21
77973	Bolt-1 for 19478	16

Item No.	Description	Position
77974	Flat for 19478	17
77977	Screw for Holder for 19478	23
77978	Tray for 19478	24
31480	Ice Pipe for 19478	25, 27
77979	Bolt-3 for 19478	26
77980	Bolt for 19478	28
79581	Handle Seals for 19478	

Item 19479

Item No.	Description	Position
31472	Top Handlebar for 19479	1
31473	Lid for 19479	2
31474	Net for 19479	3
31475	PC Body for 19479	4
31476	Handlebar for 19479	5
31477	Small Screw for 19479	6
AX003	Tap for 19479	7
77969	Small Cover for 19479	8

Item No.	Description	Position
77976	Holder Seat Assembly for 19479	9
31478	Net Seat for 19479	10
31479	Water Seat for 19479	11
77970	F-Screw for 19479	12
77971	Nut for 19479	13
77972	Feet for 19479	14
63541	Board Assembly for 19479	15 - 21
77973	Bolt-1 for 19479	16

Item No.	Description	Position
77974	Flat for 19479	17
77977	Screw for Holder for 19479	23
77978	Tray for 19479	24
31480	Ice Pipe for 19479	25, 27
77979	Bolt-3 for 19479	26
77980	Bolt for 19479	28
79581	Handle Seals for 19479	

Item 19480

Item No.	Description	Position
31472	Top Handlebar for ZCF303	1
31473	Lid for ZCF303	2
31474	Net for ZCF303	3
31475	PC Body for ZCF303	4
31476	Handlebar for ZCF303	5
31477	Small Screw for ZCF303	6
AX003	Tap for ZCF303	7
77969	Small Cover for ZCF303	8

Item No.	Description	Position
77976	Holder Seat Assembly for ZCF303	9
31478	Net Seat for ZCF303	10
31479	Water Seat for ZCF303	11
77970	F-Screw for ZCF303	12
77971	Nut for ZCF303	13
77972	Feet for ZCF303	14
63542	Board Assembly for ZCF303	15 - 21
77973	Bolt-1 for ZCF303	16

Item No.	Description	Position
77974	Flat for ZCF303	17
77977	Screw for Holder for ZCF303	23
77978	Tray for ZCF303	24
31480	Ice Pipe for ZCF303	25, 27
77979	Bolt-3 for ZCF303	26
77980	Bolt for ZCF303	28
79581	Handle Seals for ZCF303	

Warranty Registration

Thank you for purchasing an Omcan product. To register your warranty for this product, complete the information below, tear off the card at the perforation and then send to the address specified below. You can also register online by visiting:

Merci d'avoir acheté un produit Omcan. Pour enregistrer votre garantie pour ce produit, complétez les informations ci-dessous, détachez la carte au niveau de la perforation, puis l'envoyer à l'adresse spécifié ci-dessous. Vous pouvez également vous inscrire en ligne en visitant:

Gracias por comprar un producto Omcan usted. Para registrar su garantía para este producto, complete la información a continuación, cortar la tarjeta en la perforación y luego enviarlo a la dirección indicada a continuación. También puede registrarse en línea en:

https://omcan.com/warranty-registration/

For mailing in Canada

Pour postale au Canada

Por correo en Canadá

OMCAN
PRODUCT WARRANTY REGISTRATION
3115 Pepper Mill Court,
Mississauga, Ontario
Canada, L5L 4X5

For mailing in the US

Pour diffusion aux États-Unis

Por correo en los EE.UU.

OMCAN
PRODUCT WARRANTY REGISTRATION
4450 Witmer Industrial Estates, Unit 4,
Niagara Falls, New York
USA, 14305

or email to: service@omcan.com

Purchaser's Information

Name: _____

Address: _____

City: _____ Province or State: _____ Postal or Zip: _____

Country: _____

Dealer from which Purchased: _____

Dealer City: _____ Dealer Province or State: _____

Invoice: _____

Company Name: _____

Telephone: _____

Email Address: _____

Type of Company:

☐ Restaurant ☐ Bakery ☐ Deli

☐ Butcher ☐ Supermarket ☐ Caterer

☐ Institution *(specify)*: _____

☐ Other *(specify)*: _____

Model Name: _____ Model Number: _____ Serial Number: _____

Machine Description: _____

Date of Purchase (MM/DD/YYYY): _____ Date of Installation (MM/DD/YYYY): _____

Would you like to extend the warranty? ☐ Yes ☐ No

Thank you for choosing Omcan | Merci d'avoir choisi Omcan | Gracias por elegir Omcan

Since 1951 Omcan has grown to become a leading distributor of equipment and supplies to the North American food service industry. Our success over these many years can be attributed to our commitment to strengthen and develop new and existing relationships with our valued customers and manufacturers. Today with partners in North America, Europe, Asia and South America, we continually work to improve and grow the company. We strive to offer customers exceptional value through our qualified local sales and service representatives who provide convenient access to over 6,500 globally sourced products.

Depuis 1951 Omcan a grandi pour devenir un des “leaders” de la distribution des équipements et matériel pour l’industrie des services alimentaires en Amérique du Nord. Notre succès au cours de ces nombreuses années peut être attribué à notre engagement à renforcer et à développer de nouvelles et existantes relations avec nos clients et les fabricants de valeur. Aujourd’hui avec des partenaires en Amérique du Nord, Europe, Asie et Amérique du Sud, nous travaillons continuellement à améliorer et développer l’entreprise. Nous nous efforçons d’offrir à nos clients une valeur exceptionnelle grâce à nos ventes locales qualifiées et des représentants de service qui offrent un accès facile à plus de 6500 produits provenant du monde entier.

Desde 1951 Omcan ha crecido hasta convertirse en un líder en la distribución de equipos y suministros de alimentos en América del Norte industria de servicios. Nuestro éxito en estos años se puede atribuir a nuestro compromiso de fortalecer y desarrollar nuevas relaciones existentes con nuestros valiosos clientes y fabricantes. Hoy con socios de América del Norte, Europa, Asia y América del Sur, que trabajan continuamente para mejorar y crecer la empresa. Nos esforzamos por ofrecer a nuestros clientes valor excepcional a través de nuestro local de ventas y representantes de los servicios que proporcionan un fácil acceso a más de 6,500 productos con origen a nivel mundial.