Hot Chocolate Dispensers

Models DI-CN-0005, 0010

Items 39482, 31840

Instruction Manual

STOP

DO NOT RETURN THIS PRODUCT TO THE STORE

For questions or assistance with this product call OMCAN Toll Free:
1 800 465 0234
Customer Service
or
visit the Support section of
www.omcan.com

Revised - 09/18/2026

Toll Free: 1-800-465-0234
Fax: 905-607-0234
Email: service@omcan.com
www.omcan.com

MADE IN CHINA

Table of Contents

Model DI-CN-0005 / Model DI-CN-0010

Section	Page
General Information	3 - 4
Safety and Warranty	4 - 7
Technical Specifications	7 - 8
Installation	8 - 10
Operation	11 - 12
Maintenance	12 - 23
Troubleshooting	23 - 24
Parts Breakdown	25- 27
Electrical Schematics	28
Notes	29 - 34
Warranty Registration	35

General Information

Omcan Manufacturing and Distributing Company Inc., Food Machinery of America, Inc. dba Omcan and Omcan Inc. are not responsible for any harm or injury caused due to any person's improper or negligent use of this equipment. The product shall only be operated by someone over the age of 18, of sound mind, and not under the influence of any drugs or alcohol, who has been trained in the correct operation of this machine, and is wearing authorized, proper safety clothing. Any modification to the machine voids any warranty, and may cause harm to individuals using the machine or in the vicinity of the machine while in operation.

CHECK PACKAGE UPON ARRIVAL

Upon receipt of an Omcan shipment please inspect for external damage. If no damage is evident on the external packaging, open carton to ensure all ordered items are within the box, and there is no concealed damage to the machine. If the package has suffered rough handling, bumps or damage (visible or concealed), please note it on the bill of lading before accepting the delivery and contact Omcan within 24 hours, so we may initiate a claim with the carrier. A detailed report on the extent of the damage caused to the machine must be filled out within three days, from the delivery date shown in the shipping documents. Omcan has no recourse for damaged products that were shipped collect or third party.

Before operating any equipment, always read and familiarize yourself with all operation and safety instructions.

Omcan would like to thank you for purchasing this machine. It's of the utmost importance to save these instructions for future reference. Also save the original box and packaging for shipping the equipment if servicing or returning of the machine is required.

Omcan Fabrication et distribution Companie Limité et Food Machinery d'Amerique, dba Omcan et Omcan Inc. ne sont pas responsables de tout dommage ou blessure causé du fait que toute personne ait utilisé cet équipement de façon irrégulière. Le produit ne doit être exploité que par quelqu'un de plus de 18 ans, saine d'esprit, et pas sous l'influence d'une drogue ou d'acohol, qui a été formé pour utiliser cette machine correctement, et est vêtu de vêtements de sécurité approprié. Toute modification de la machine annule toute garantie, et peut causer un préjudice à des personnes utilisant la machine ou des personnes à proximité de la machine pendant son fonctionnement.

VÉRIFIEZ LE COLIS DÈS RÉCEPTION

Dès réception d'une expédition d'Omcan veuillez inspecter pour dommages externes. Si aucun dommage n'est visible sur l'emballage externe, ouvrez le carton afin de s'assurer que tous les éléments commandés sont dans la boîte, et il n'y a aucun dommage dissimulé à la machine. Si le colis n'a subi aucune mauvaises manipulations, de bosses ou de dommages (visible ou cachée), notez-le sur le bond de livraison avant d'accepter la livraison et contactez Omcan dans les 24 heures qui suivent, pour que nous puissions engager une réclamation auprès du transporteur. Un rapport détaillé sur l'étendue des dommages causés à la machine doit être rempli dans un délai de trois jours, à compter de la date de livraison indiquée dans les documents d'expédition. Omcan n'a aucun droit de recours pour les produits endommagés qui ont été expédiées ou cueilli par un tiers transporteur.

Avant d'utiliser n'importe quel équipement, toujours lire et vous familiariser avec toutes les opérations et les

General Information

consignes de sécurité.

Omcan voudrais vous remercier d'avoir choisi cette machine. Il est primordial de conserver ces instructions pour une référence ultérieure. Également conservez la boîte originale et l'emballage pour l'expédition de l'équipement si l'entretien ou le retour de la machine est nécessaire.

Omcan Empresa De Fabricacion Y Distribucion Inc. Y Maquinaria De Alimentos De America, Inc. dba Omcan y Omcan Inc. no son responsables de ningun daño o perjuicío causado por cualquier persona inadecuada o el uso descuidado de este equipo. El producto solo podra ser operado por una persona mayor de 18 años, en su sano juicio y no bajo alguna influencia de droga o alcohol, y que este ha sido entrenado en el correcto funcionamiento de esta máquina, y ésta usando ropa apropiada y autorizada. Cualquier modificación a la máquina anúla la garantía y puede causar daños a las personas usando la máquina mientras esta en el funcionamiento.

REVISE EL PAQUETE A SU LLEGADA

Tras la recepcion de un envio Omcan favor inspeccionar daños externos. Si no hay daños evidentes en el empaque exterior, Habra el carton para asegurararse que todos los articulos solicitados ésten dentro de la caja y no encuentre daños ocultos en la máquina. Si el paquete ha sufrido un manejo de poco cuidado, golpes o daños (visible o oculto) por favor anote en la factura antes de aceptar la entrega y contacte Omcan dentro de las 24 horas, de modo que podamos iniciar una reclamación con la compañia. Un informe detallado sobre los daños causados a la máquina debe ser llenado en el plazo de tres días, desde la fecha de entrega que se muestra en los documentos de envío. Omcan no tiene ningun recurso por productos dañados que se enviaron a recoger por terceros.

Antes de utilizar cualquier equipo, siempre lea y familiarizarse con todas las instrucciones de funcionamiento y seguridad.

Omcan le gustaría darle las gracias por la compra de esta máquina. Es de la mayor importancia para salvar estas instrucciones para futuras consultas. Además, guarda la caja original y el embalaje para el envío del equipo si servicio técnico o devolución de la máquina que se requiere.

Safety and Warranty

GENERAL SAFETY RULES

Carefully read the entire instruction manual before use. The connection to the electricity main socket must comply with the current safety standards. The machine must be connected to an electric outlet that is:

- Compatible with the plug provided with the machine.
- Of dimensions conforming to the data shown on the rating plate on the side of the machine.
- Properly grounded.
- Connected to a system provided with a differential switch and circuit breaker.

- Connected to a system that has been certified according to the current standards and regulations in the country of use.

The power cord must not be:
- Allowed to come into contact with any kind of liquid: danger of electric shocks and/or fire.
- Crushed and/or brought into with sharp surfaces.
- Used to move the machine.
- Used if it shows any damage.
- Handle with dent or wet hands.
- Would into a coil when the machine is on.
- Tampered with.

Do not:
- Install the machine in a manner other than that described in installation.
- Install the machine in a place where it may be exposed to sprays of water.
- Use the machine near inflammable and/or explosive substances.
- Leave plastic bags, polystyrene, nails etc. within children's reach, since they are potential sources of danger.
- Allow children to play or stay near the machine.
- Use spare parts other than those recommended by the manufacturer.
- Make any technical changes to the machine.
- Immerse the machine in any kind of liquid.
- Spray water to the machine to wash it.
- Use the machine other than as directed in this manual.
- Use the machine when not in full possession of your mental and physical faculties; Under the influence of the drugs, alcohol, etc.
- Install the machine on top of other equipment.
- Use the machine in an explosive aggressive atmosphere or in the presence of a high concentration of dust or oily substances suspended in the air.
- Use the machine in a place where there is a risk of fire.
- Use the machine to dispense substances that are not compatible with the machine's specifications.
- Clean and service the machine when the main switch is set to –ON- or with the plug inserted into the mains outlet.

The appliance is not intended for use by persons (including children) with reduced physical, sensor or mental capabilities, or lack of experience and knowledge, unless they have been given supervision or instruction concerning use of the appliance by a person responsible for their safety. Before cleaning the machine, make sure it is unplugged; wait until the machine has cooled down sufficiency. Do not clean the machine with gasoline and/or solvents of any kind. Repair work may be performed only by a Service Center authorized by the Manufacturer and/or specialized, trained personnel. Do not site the machine near heating equipment (stoves or radiators). In case of fire, use carbon dioxide (C02) extinguishers. Do not use water or powder extinguishers. In the event of improper use, all warranty rights will be forfeited and the manufacturer will accept no liability for injury or damage to persons and/or property.

The following are to be considered improper use:

Safety and Warranty

- Any use other than the intended use and/or with methods other than those described herein.
- Any operation on the machine that is in contrast with the directions provided herein.
- Use of the machine after any components have been tampered with and/or safety devices have been changed.
- Use of the machine after it has undergone repair with components not authorized by the manufacturer.
- Outdoor installation of the machine.

STOP FUNCTIONS
The machine is shut down by turning off the on/off switch.

PLATES
None of the plates or labels applied on the machine must be removed, covered or damaged, especially those relating to safety. In the event of damage to any of the rating plates on the machine, contact the manufacturer for a replacement.

EMERGENCY SITUATIONS

Warning: to stop the machine in any emergency situation, firmly press the main switch so that it sets to OFF. In the event of fire, it is necessary to clear the area in order to allow trained staff, with the proper protective equipment to intervene. Always use approved extinguishers and never use water or substances of an uncertain nature.

RESIDENTIAL USERS: vendor assumes no liability for parts or labor coverage for component failure or other damages resulting from installation in non-commercial or residential applications. The right is reserved to deny shipment for residential usage; if this occurs, you will be notified as soon as possible.

1 YEAR PART AND LABOUR BENCH WARRANTY

Within the warranty period, contact Omcan Inc. at 1-800-465-0234 to schedule a drop off to either an Omcan authorized service depot in the area, or to an Omcan Service warehouse to repair the equipment.

Unauthorized maintenance will void the warranty. Warranty covers electrical and part failures, not improper use.

Please see https://omcan.com/disclaimer for complete info.

WARNING:

The packaging components (cardboard, polyethylene, and others) are classified as normal solid urban waste and can therefore be disposed of without difficulty.

In any case, for suitable recycling, we suggest disposing of the products separately (differentiated waste) according to the current norms.

Safety and Warranty

DO NOT DISCARD ANY PACKAGING MATERIALS IN THE ENVIRONMENT!

Technical Specifications

MACHINE DESCRIPTION

USE OF THE MACHINE

The machine for professional use you have purchased is intended to produce hot chocolate drinks.

MAIN COMPONENTS

The main components making up the machine are:

1. Bowl lid.
2. Bowl (5 or 10 liters [1.32 or 2.64 US gals]).
3. Mixing auger.
4. Bowl hook-on handles.
5. Machine body.
6. Main switch.
7. Chocolate temperature adjustment thermostat (°C - °F).
8. Lower body.
9. Mixer.
10. Pan.
11. Lid for boiler tank water level indicator tray.
12. Boiler tank water level indicator tray.
13. Product dispenser unit (tap).
14. Drip tray maximum level indicator.
15. Drip tray grid.
16. Drip tray.
17. Boiler tank drainage cap.

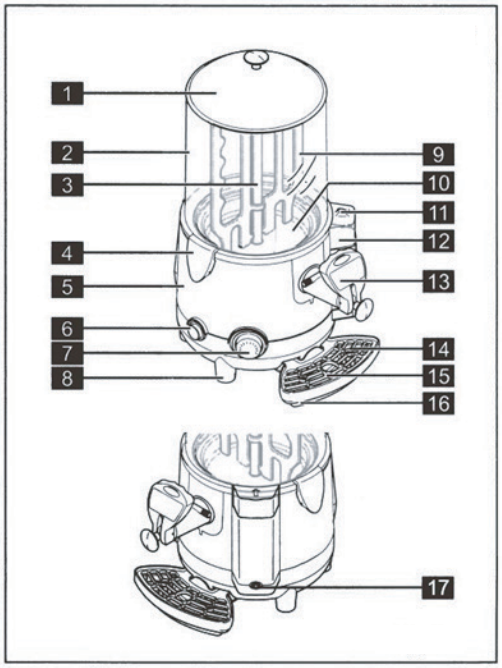

Technical Specifications

TECHNICAL DATA

The technical data and features are listed below:

Model	DI-CN-0005	DI-CN-0010
Item Number	39482	31840
Capacity	5 L / 1.3 Gal	10 L / 2.6 Gal
Power	1200 W	
Electrical	110-120V / 60Hz / 1	
Net Weight	16.5 lbs. / 7.5 kgs.	17.6 lbs. / 8 kgs.
Net Dimensions (DWH)	16” x 11” x 18.3” / 406 x 279 x 465mm	16” x 11” x 22.8” / 406 x 279 x 579mm
Packaging Weight	19.8 lbs. / 9 kgs.	22 lbs. / 10 kgs.
Packaging Dimensions (DWH)	15” x 15” x 25.4” / 381 x 381 x 645mm	15” x 15” x 25.4” / 381 x 381 x 645mm

Note: the manufacturer reserves the right to make changes to the machine without notice.
Important: any changes and/or additions of accessories must be explicitly approved and implemented by the manufacturer.

Installation

The machine must be installed indoors in a well-lit and well-ventilated room with a firm, solid, level floor (slope less than 20°); during installation, place the machine well out of the reach of children and unauthorized persons.

The machine may only operate in places with an ambient temperature ranging between 10°C (50°F) and 32°C (89.6°F).

ACCESSORIES SUPPLIED

Pipe cleaner: for correct cleaning of the hot chocolate dispensing channel.

POSITIONING

It is necessary to check the following:

- The site has been duly prepared for machine installation.
- That the premises are suitably well lit, aired, clean and hygienic, and that the power socket is within easy reach.
- The surface the machine will be installed on is firm, flat and solid.

- That the machine is placed at least 20 cm {7.8 inches) from the edge of the top used.

Adequate clearance must be left around the machine to enable personnel to work without any constraints and also to leave the work area immediately in case of need. The image to the right shows the minimum clearances for installation.

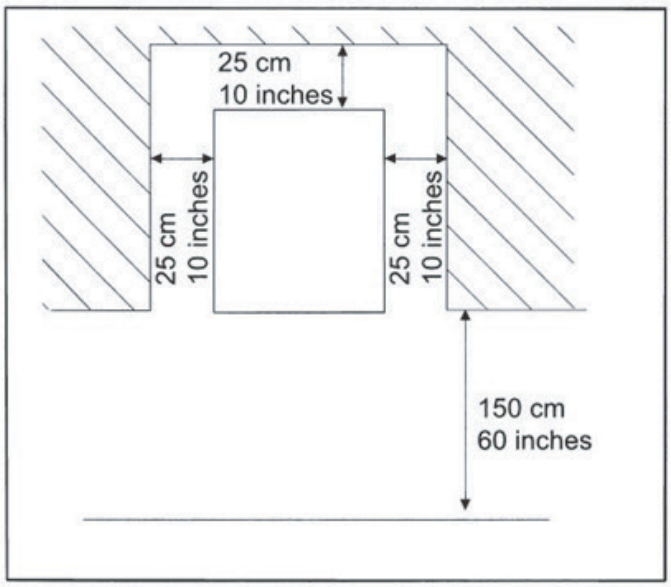

The image shows the clearances required for accessing:
- The controls situated on the left side.
- Machine parts so that they may be serviced in the event of a fault.

Important note: when lifting the machine, do not use the product dispenser unit (tap), drainage pipe, water level indicator tray, bowl hook on handles or the bowl itself; grip the bottom machine body. Any damage to the machine deriving from failure to follow these rules will not be covered by the warranty.

After positioning the packing container in the vicinity of the installation site, proceed as follows:
- Open the front pad of the packing container.
- Lift the machine and remove it from its packing.
- Then position it on the prepared site.

Before the machine is operated the first time, its components must be thoroughly cleaned; for further details see the relevant section herein.

DISPOSAL OF PACKING MATERIALS

After opening the box, make sure to separate the packing materials according to type and dispose of them in accordance with the current regulations in the user's country. We recommend keeping the box for future conveyance or transport.

ELECTRICAL CONNECTION

This job may be performed only by specialized technical personnel. Before inserting the plug into the mains power socket, make sure that:
- The line voltage used is the same as the value indicated on the manufacturer's rating plate.
- The main switch is set to OFF.

If the machine is being connected to the electricity mains for the first time, this operation must be performed by a specialized technician, while the Customer will be responsible for and have to take care of any subsequent connections. The machine must be connected to the electricity main socket by means of the plug fitted on the power cord. Be sure to comply with:
- The technical regulations and standards in force at the time of installation.
- The data shown on the rating plate on the side of the machine.

Installation

Warning: the electric outlet must be situated in a place easily within reach of the user, so that no effort is required in order to disconnect the machine from the power supply when necessary. If the power cord is damaged, you must have it replaced either by the manufacturer or a specialized technician.

It is forbidden:
- To use extension cords of any type.
- To replace the original plug.
- To use adaptors.

Suggested Heating Function & Temperature Range for Refrigerated Liquid.

Both models can heat refrigerated liquid and maintain the desired serving temperature. The heating temperature range is **33.8°F to 194°F (1°C to 90°C**), allowing the unit to heat the product to temperatures such as **145–150°F (63–66°C).**

Once the desired temperature is reached, the dispenser can continuously heat, hold, and stir the product for several hours, helping maintain a consistent temperature and smooth texture during service.

Heating Temperature Range:
33.8°F–194°F (1°C–90°C)

Operation

Warning: fill the boiler tank by pouring in water slowly and check for a few seconds to make sure that the water level has reached the MAX level and that it is stable.

When filling an empty boiler rank for the first time, the amount of water needed to completely fill the tank is approximately 3.25 liters (0.86 GAL US).

- Remove the lid and pour the beverage prepared according to the manufacturer's instructions into the bowl.
- Never exceed the maximum level, which is marked MAX on the tray itself.
- After pouring the product into the bowl, fit the lid back in place.
- Make sure that the plug has been inserted into the mains socket.
- Press the main switch to start the machine; the product inside the bowl will start to be mixed.

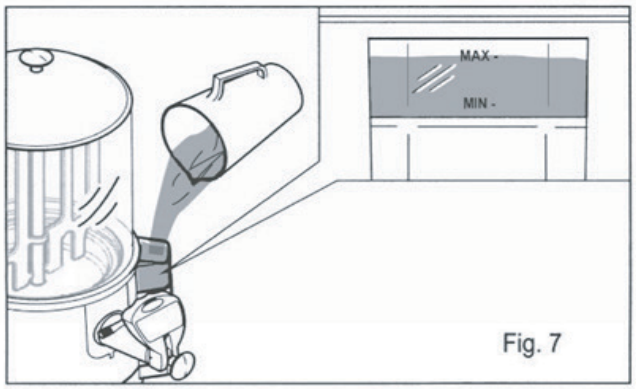

Fig. 7

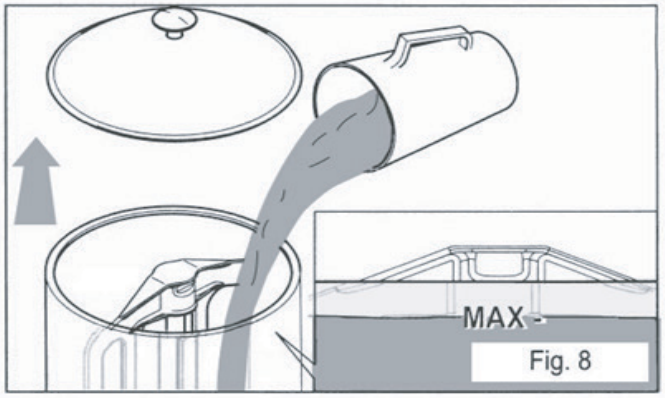

Fig. 8

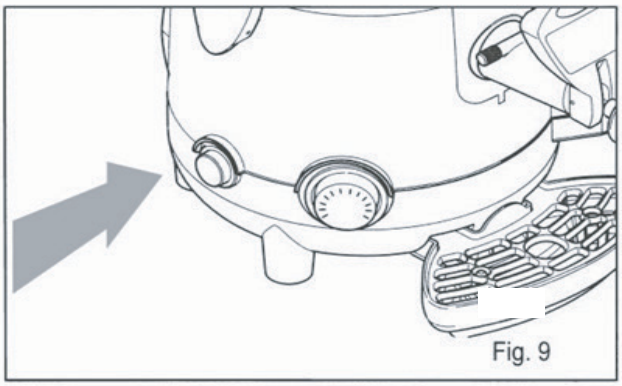
Fig. 9

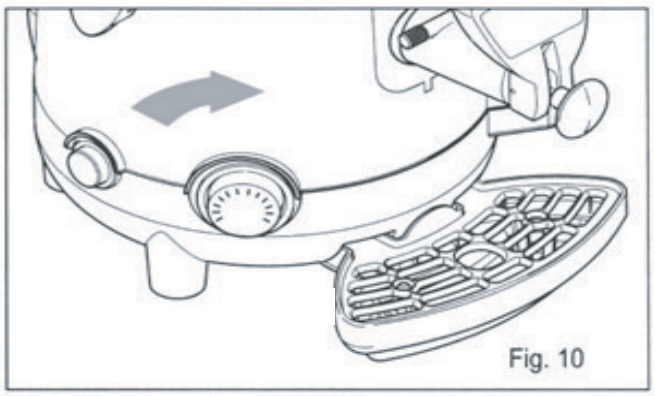
Fig. 10

Operation

LIT LED: MACHINE ON.
LED OFF: MACHINE OFF.

- Set the thermostat to the required temperature to heat the product inside the bowl.
- The machines with LCD offer the opportunity to make a visual check to see when the product has reached the required temperature inside the bowl.

Warning: during bowl and/or boiler switch off the machine using the main switch (LED off). There is a temperature sensor, if the water is boiled up and the heating element is over heated. The temperature sensor will shut down the machine. Then you need to press the reset button to restart the machine.

DISPENSING THE PRODUCT

Warning: the products dispensed from the machine has a very high temperature; risk of scalding.

To dispense hot chocolate proceed as follows:

Note: it is advisable to keep the rod in the maximum dispensing position to help the product to flow at the required rate.

- Place a cup beneath the tap.
- Use the lever on the tap (the product is dispensed when the level is pressed or pulled) until the required amount of product has been poured inside the cup.
- Gradually release the tap level so that it returns to the standby position (tap off).
- If the product is especially think, it is advisable to keep the rod pulled out at the maximum position; any clogging in the spout may be removed by sliding the rod back and forth while keeping the machine.

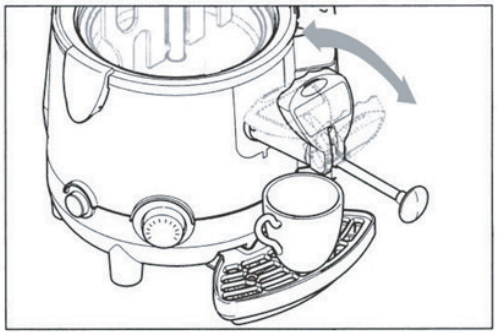

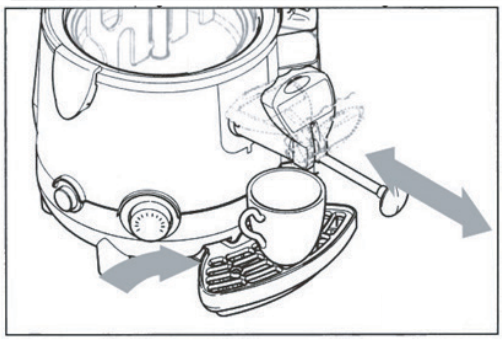

Warning: never touch the bowl or lid while the machine is operating, since they are very hot, Always use the knob when moving the bowl lid.

Maintenance

CLEANING AND MAINTENANCE

Machine cleaning and maintenance must be performed with the main switch set to OFF and the machine unplugged from the main socket.

Warning: each time that the bowl is filled with any type of product (food or sanitizing product), make sure that

Maintenance

the mixing rod is present.

Warning: before carrying out any cleaning job wait until the machine has cooled down sufficiently.

Warning: the use of abrasive and/or metal sponges to clean the machine or its components is completely prohibited; only use ad amp cloth and/or non-abrasive sponge for cleaning.

Warning: only use the cleaning brush provided to clean the channel connecting between the tank and the tap; never use this brush to clean other parts.

Before performing any cleaning and maintenance operation on the machine, wear the personal protections (gloves, glasses,etc.), which are recommended by the safety standards in force in the country where the machine is used.

When performing the Cleaning and Maintenance operations, follow these instructions:

- Wear protection accident-proof gloves.
- Do not use solvents or in flammable materials.
- Do not use abrasive and/or metal sponges to clean the machine and its components.
- Do not wash machine components in a dishwasher.
- Do not dry parts of the machine in a conventional and/or microwave oven.
- Do not immerse the machine in water.
- Do not expose the machine to direct sprays of water.
- Clean only with warm water and a sanitizing product made from sodium hypochlorite diluted in water to obtain an active chloride concentration.
- On completing work, make sure that all protective covers and guards that have been removed or opened are set back in place and properly secured.

Cleaning and sanitization are operations that must be performed with utmost care and on a regular basis to guarantee the quality of the beverages dispensed and compliance with mandatory hygiene standards.

Each bowl must be cleaned and sanitized for a product change at least every 2 days and in any case in compliance with the current hygiene regulations in the user's country. These operations must be made more frequently if demanded by the characteristics of the product used; for further details, contact the product supplier.

The metal, plastic and rubber materials used to make these parts, combined with their specific shapes make cleaning easier but do not prevent the formation of bacteria and mould in the event of insufficient cleaning.

CLEANING AND SANITATION PROCEDURES

Maintenance

EMPTYING THE BOWL

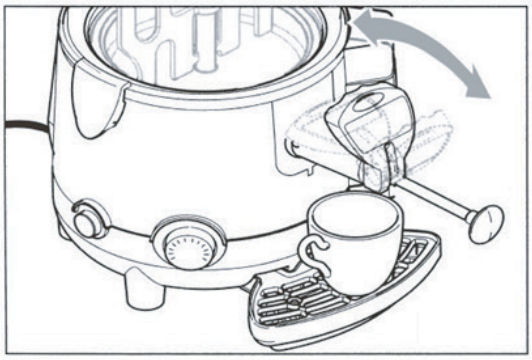

Before cleaning out the bowl, it is first necessary to empty out any production inside it.

With the machine switched on, empty out all of the product still inside the bowl, using the level on the tap. Fill the bowl with water and set thermostat to 50°C (122°F), operate the appliance for at least 15-20 minutes; increasing this amount of time will release any product residues that may be stuck to the sides of the bowl. Empty out the entire contents of the bowl, using the lever on the tap.

Warning: the product dispensed from the machine has a very high temperature; risk of scalding.

REMOVING THE BOWL

Warning: before removing the bowl, make sure that the main switch is off and that the machine is unplugged from the mains electricity and sufficiently cooled down.

Removing the bowl is prohibited if it contains the product or any other liquid. It Is fundamentally important to remove the bowl and its component parts if the machine is to be correctly cleaned and sainted.

To remove the bowl correctly proceed as follows:

- Take off the lid.
- Slide the mixer upwards to remove it, keeping it in line with the central rod until the bottom slot of the mixer itself is level with the rotation pin.

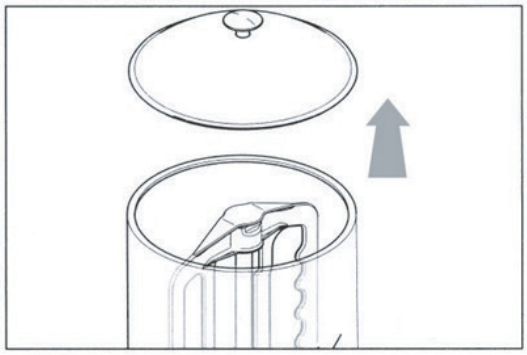

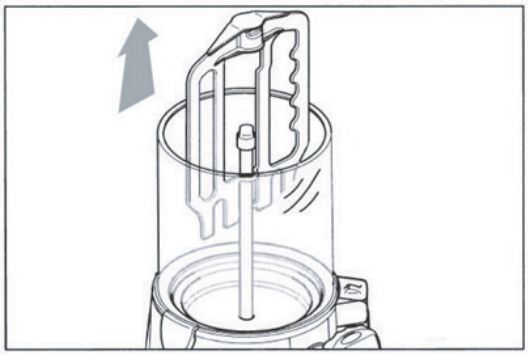

Maintenance

- Tilt the mixer and slide it upwards, as illustrated in the figure, to remove it completely.
- Unlock the bowl hook-on handles, as illustrated in the figure, to free the bowl from the machine body.

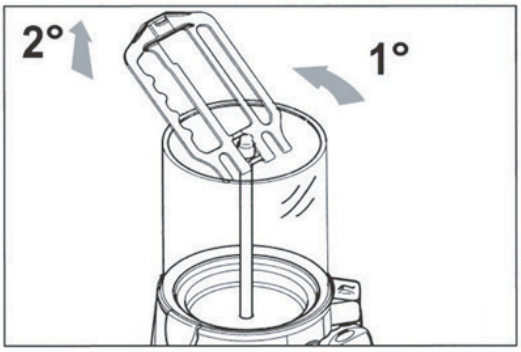

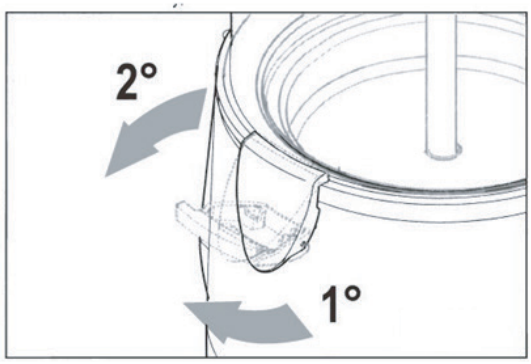

- Release the bowl from the machine body, using two fingers to pry it away from the fixed steel part of the mixer auger(A) and the others to grip the outlet edge of the bowl(B): Gradually pull the bowl harder until it comes away from its seating.
- Slide the bowl upwards using both hands.

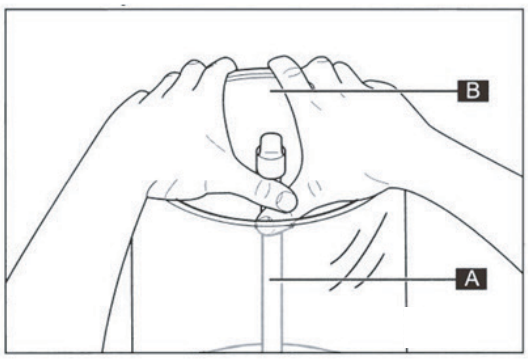

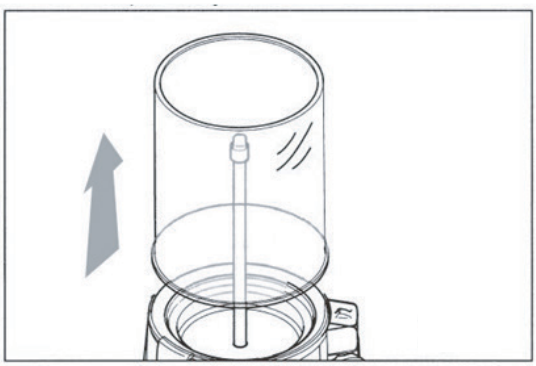

- Slide the mixing auger upwards with one hand, taking care to grip it by the rotation pin.
- Place the bowl on a flat surface and using both hands, remove the gasket by sliding it upwards in the direction shown by the arrow.

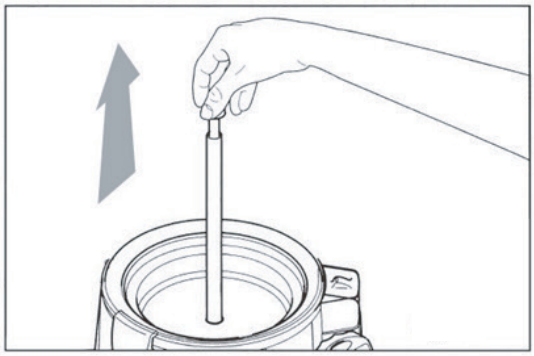

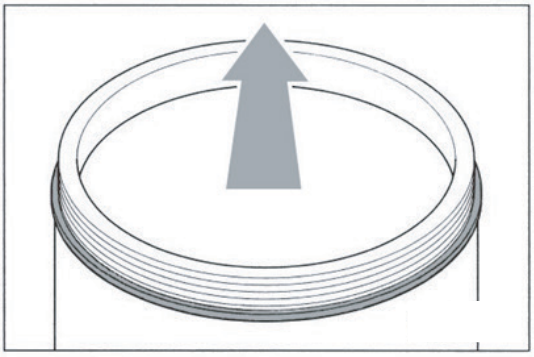

Maintenance

REMOVING THE TAP

Removing the tap is prohibited if the bowl contains the product or any other liquid.

To remove the tap, proceed as follows:

- Move the rod to the maximum dispensing position.

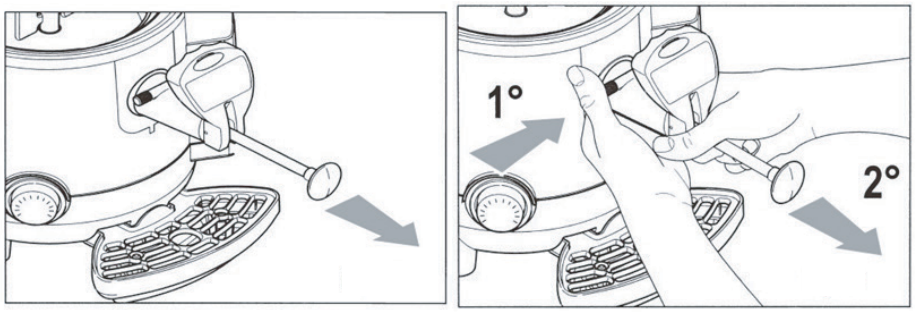

- Press the button (A) securing the tap to the machine and then remove the tap (B) with both hands.

CLEANING THE PAN

It is necessary to remove all parts fitted to the pan:

- Remove any product left in the bowl.
- Remove the bowl from the machine.
- Remove the tap from the machine.
- Clean the entire surface of the pan using a damp cloth and/or a non-abrasive sponge.
- Clean the channel connecting the bowl and the tap, using a cleaning brush.
- Refit the tap.
- Pour a little water inside the pan.
- Use the tap to drain out all water from the pan so as to eliminate any small product residues inside the

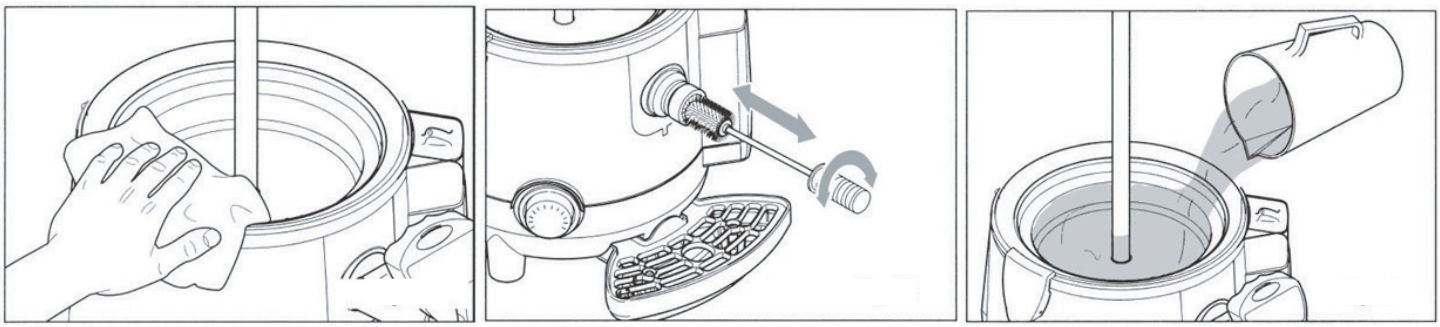

dispensing channel.

DISASSEMBLING THE TAP

Maintenance

To clean the inside of the tap more thoroughly, disassemble it as follows:

- Remove the tap.
- Place the tap on a clean, flat surface, then loosen and remove the screw (A) fastening the button to the

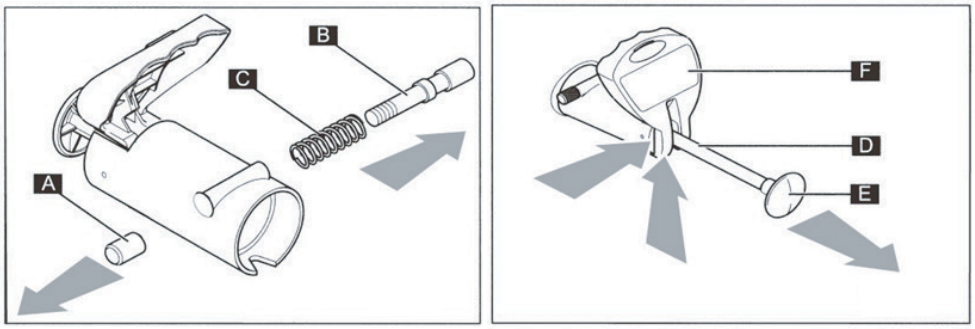

machine, then slide out the pin (B) and relevant spring (C) from the seating.

- Pull the (D) all the way out from the knob (E) then push the lever (F) upwards from the bottom until it comes out from the pin guide.

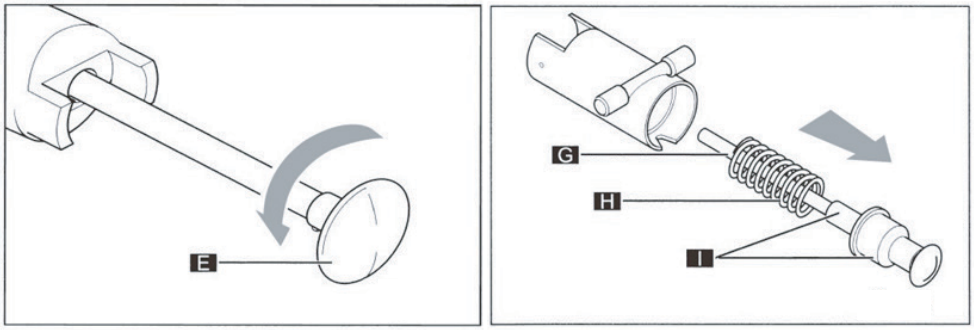

- Unscrew the knob (E) by turning it counterclockwise while holding the rod in place.
- Pull out the rod (G) and spring (H) from the tap body (the pin/gasket assembly (I) will slide out together

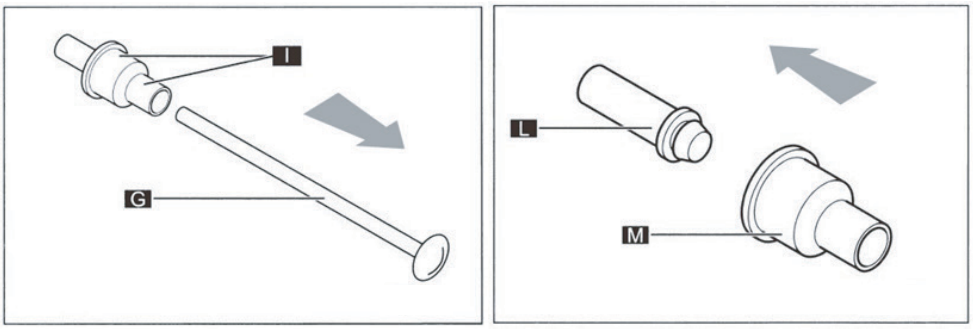

with the rod).

- Detach the rod (G) from the pin/gasket assembly (I).
- Disassemble (by pulling) the pin (L) from the gasket (M).

WASHING AND SANITIZING THE COMPONENTS

Maintenance

All of the component parts previously disassembled (tap, mixer, mixing auger, gasket and bowl) must be carefully washed and sanitized.

To carry out this procedure correctly proceed as follows:
- Fill a container with detergent and hot water with a temperature of 50~60°C (122~140°F).
- Wash the disassembled components with the detergent solution.
- Rinse with hot water.
- Clean only with warm water and a sanitizing product made from sodium hypochlorite diluted in water to obtain an active chloride concentration of 0.02%.
- Immerse the disassembled component parts in the sanitizing solution for about 30 minutes.
- Rinse with clean water.
- Clean the bowl lid.
- Place the components on a clean surface and dry them.

ASSEMBLING THE WASHED COMPONENTS

All washed and sanitized component parts must be re-assembled with care and then subsequently refitted to the machine, following the relevant steps.

Assembling the Bowl
Warning: make sure that the gasket is correctly assembled.

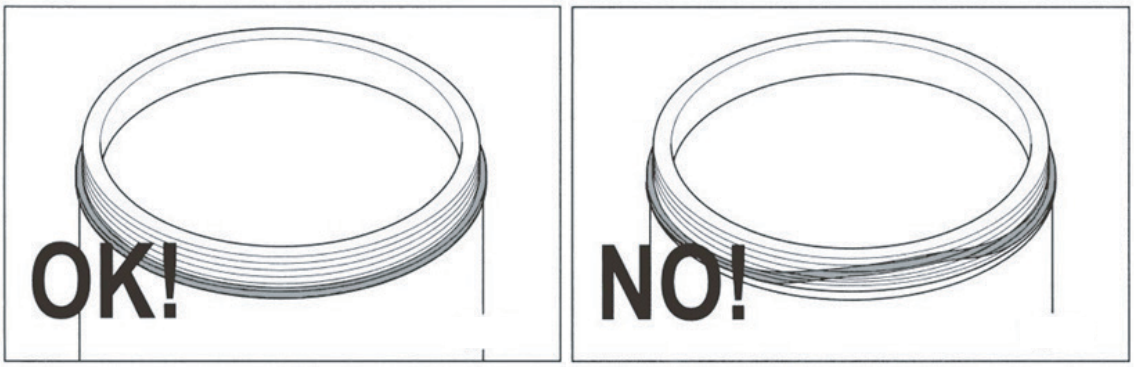

The first image shows a seal correctly assembled; here the seal perfectly adheres to the bowl edge. The second image shows a seal which is not correctly assembled; here the seal does not perfectly adhere to the bowl edge.
- Fit the bowl back into place firmly downward, after moistening the seal with water.

Maintenance

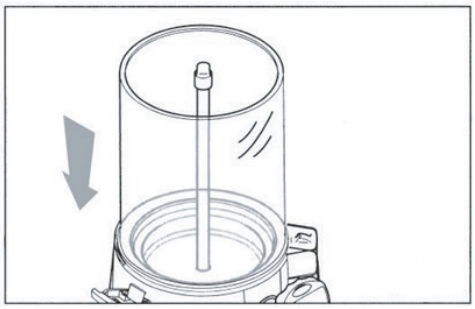

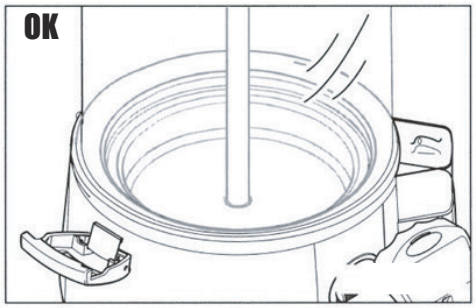

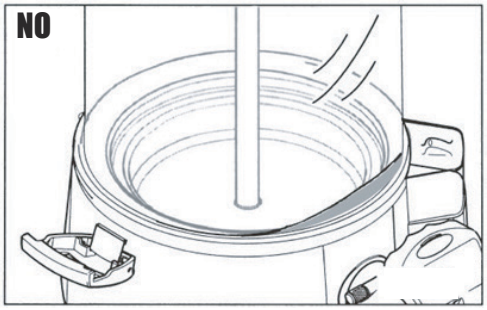

DO NOT USE GREASE OR VASELINE.

Warning: make sure that the bowl is correctly fitted to the machine; an incorrectly fitted bowl will cause the product to leak out; risk of scalding!

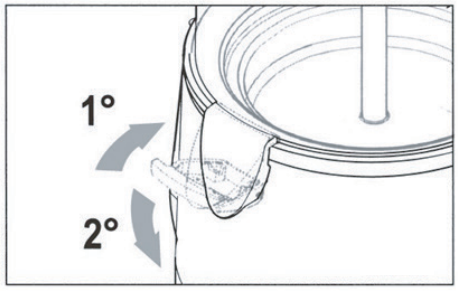

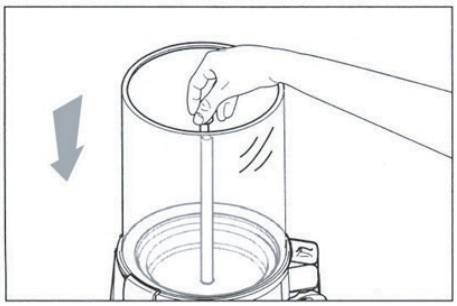

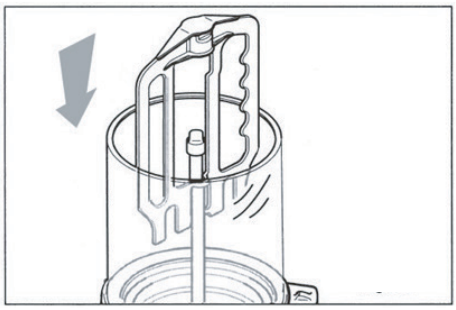

- Fix the bowl to the machine body using the relevant hook-on handles.
- Insert the mixer auger into its seating.
- Insert the mixer into its seating following the steps described in “Removing the Bowl” in reverse order.

ASSEMBLING THE BOWL

To assemble the tap, carry out in reverse all of the disassembly steps illustrated previously.

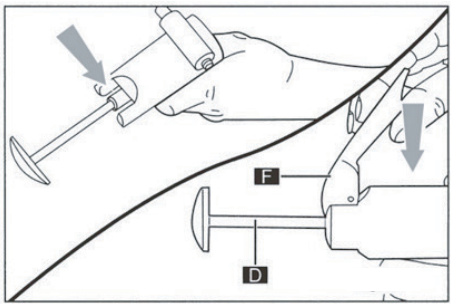

Maintenance

To fit the level (F) push the rod (D) from the inside until the guides protrude; the insert the level (F) and slowly release the rod (D).

FITTING THE TAP
To fit the lap correctly back in place proceed as follows:

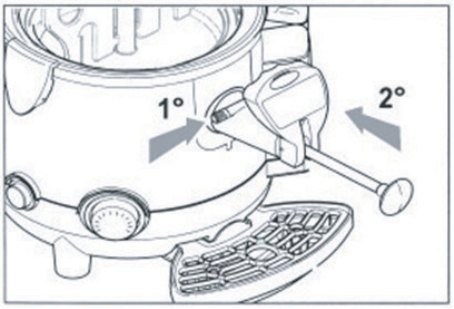

1. Hold down the button, making sure that the road is completely extracted.
2. Introduce the tap into the seat provide and push until the push button returns to its initial position.

INTERNAL SANITIZATION

Warning: the thermostat must be set to OFF.

Carry out the following steps:
- Prepare the sanitizing solution.
- Fill the bowl with the sanitizing solution.
- Leave the solution to act for about 30 mins.
- Empty out the sanitizing solution from the bowl.
- Then rinse out the bowl and inside surfaces thoroughly to eliminate all residues of sanitizing solution.

CLEANING THE DRIP TRAY

The drip tray should be emptied and cleaned daily.

Note: the tray needs to be emptied out and cleaned every time that the red float fitted to the grid rises, this is to stop liquid from leaking out.
- Lift the tray with grid and pull it outwards to remove it from its seating.
- Wash the tray and grid separately with lukewarm water.

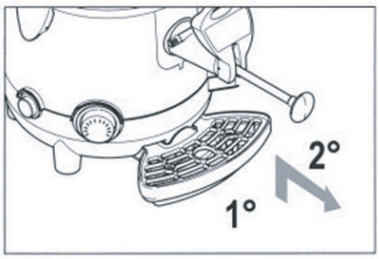

- Dry all of the components.

Maintenance

- Reposition the grid on top of the tray.
- Fit the tray back in place and press down to secure it to the machine.

CLEANING THE BOWL LID

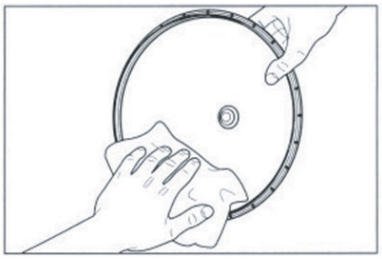

- Remove the bowl lid from the machine.
- Clean the surface using a damp cloth and / or a non-abrasive sponge soaked in sanitizing product.
- Rinse thoroughly using clean water.

EMPTYING THE BOILER

Warning: while the boiler is being emptied, the machine must be unplugged.

Warning: the boiler may be emptied only when the bowl is empty and the machine has cooled down sufficiently.

The use of water from the boiler tank for food purposes is prohibited.

To empty the boiler proceed as follows:
- Unplug the machine.
- Remove the drip tray.
- Remove the cap (A).
- Place the machine on a flat surface and with the boiler tank water level indicator tray turned towards to the outer edge of the support surface.

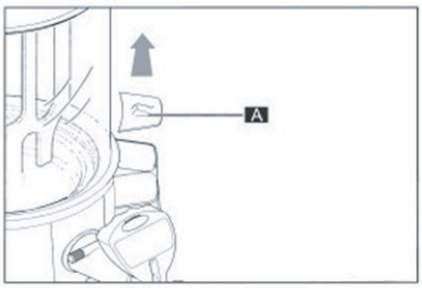

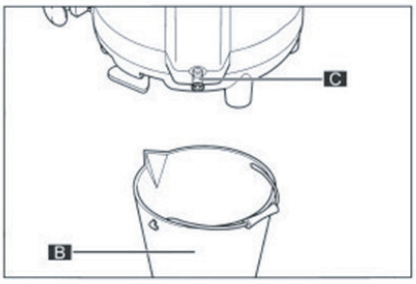

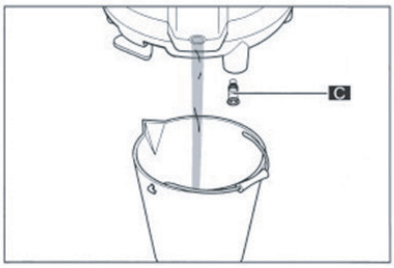

- Place a container (B) with a capacity of more than 3 liters (0.8 US gals) underneath the bleeder cap (C).

Maintenance

- Use a coin or Allen wrench to unscrew the bleeder cap (C).
- Pull out the cap (C) with a firm movement and wait for all the water to empty out from the boiler tank.

CLEANING AND DE-SCALING THE BOILER TANK

The boiler tank needs to be de-scaled on a regular basis; this operation is recommended at least once every 3 months.

- Follow the steps for draining out the boiler tank.
- Insert and secure the boiler tank bleeder cap.
- Insert water plus scale remover for coffee machines into the tank (follow the instructions on the scale remover package).
- Insert and secure the boiler tank bleeder cap.
- Leave the solution to act for the time indicated in the instruction of the solution itself.
- Empty out the solution from inside the boiler tank.
- Rinse out the tank with plenty of water, by filling and emptying it.

RESETTING THE TEMPERATURE SENSOR

The temperature sensor can only be reset by a specialized technician, who must organize all of the operating sequences and the use of the correct equipment to operate in strict compliance with the current laws to this regard.

Warning: after the temperature sensor has intervened to shut down the machine, it is indispensable to drain out any product contained inside the bowl and to clean all components before restoring the machine function.

Warning: before resetting the temperature sensor, switch off the machine using the relevant switch and unplug it from the electrical main socket, then wait for the machine to cool down.

The operator is strictly prohibited from resetting the boiler tank minimum water level temperature sensor.

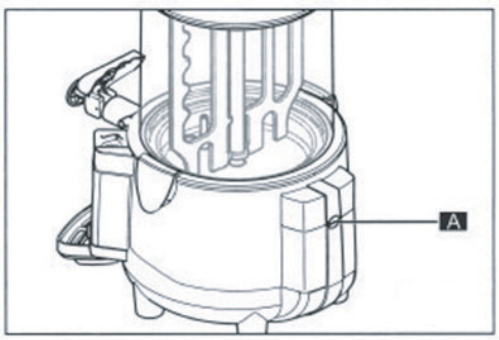

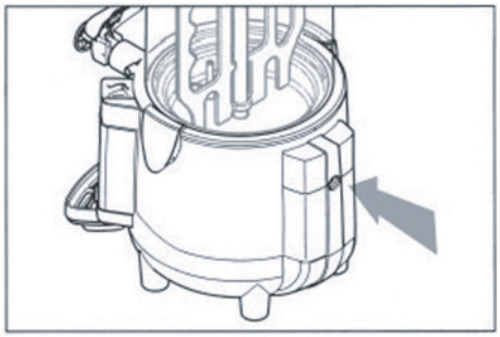

- Use a suitable tool to loosen and remove the protective screw.
- Use a suitable tool to press the button inside to restore normal machine operation.

PERIODIC MAINTENANCE

Maintenance

The machine must be periodically checked (at least once a year) by a specialized technician, this periodic check serves to ensure that all the components installed and the machine itself are maintained at a high level of safety. Any worn components must be replaced by an original spare part. It is forbidden to use the machine when even only one of its components is faulty or worn. Users are forbidden to perform periodic maintenance.

SCRAPPING

Electrical and electronic equipment needs to be disposed of according to the European Directive 2002/96/CE and in compliance with the standards and regulations in force for the country in which the machine is used. Such equipment may not be disposed of as normal municipal solid waste but must rather be separately collected to optimize recovery and recycling of the materials used to manufacture them. All products are

Troubleshooting

Problem	Cause	Remedy
Does not heat.	No power.	Make sure that the machine is plugged in properly.
	Switch set to OFF.	Switch set to OFF.
	Thermoprobe intervention.	Reset the thermal protector.
	Thermostat on “0”.	Adjust the thermostat.
Mixing paddle does not turn.	No power.	Make sure the machine is plugged in properly.
	The driving shaft is not properly in place.	Remove the shaft and then inset it correctly.
	Remove the shaft and then inset it correctly.	Contact service personnel.
	On/Off switch on (0).	Press the switch on.
Tap leaks.	It has not been fit correctly.	Empty the machine and fit the tap.
	The outlet and rubber are dirty.	Empty the machine and clean the entire tap thoroughly, fit back on the machine.
	The sealing gasket needs replacing.	Contact service personnel.

Troubleshooting

Water is escaping from the level tank.	Temperature too high.	Lower the temperature.
	The sealing gasket of the level tube needs replacing.	Contact service personnel.
	The water level is above the MAX indication when the machine is at room temperature.	Allow the machine to cool down and empty the boiler until reaching the level indicated.
Product leaks from the bottom of the transparent bowl.	The bowl has not been fit correctly in place.	Empty the machine, remove the bowl and fit it in place.
	The seal needs replacing.	Contact service personnel.
The thermometer does not show the temperature.	Dead battery.	Replace the battery.
	Probe malfunction.	Call a specialized technician.
Machine shutdown.	The water level in the boiler tank has fallen below the minimum level.	Top up the boiler tank, if a level sensor is fitted, call for a specialized technician to reset the machine.
	No water in boiler tank.	Top up the boiler tank, if a level sensor is fitted, call for a specialized technician to reset the machine.
If the machine malfunctions due to causes other than those listed in this table or the proposed remedies do not solve the problem, contact a specialized technician.		

Parts Breakdown

Model DI-CN-0005 39482
Model DI-CN-0010 31840

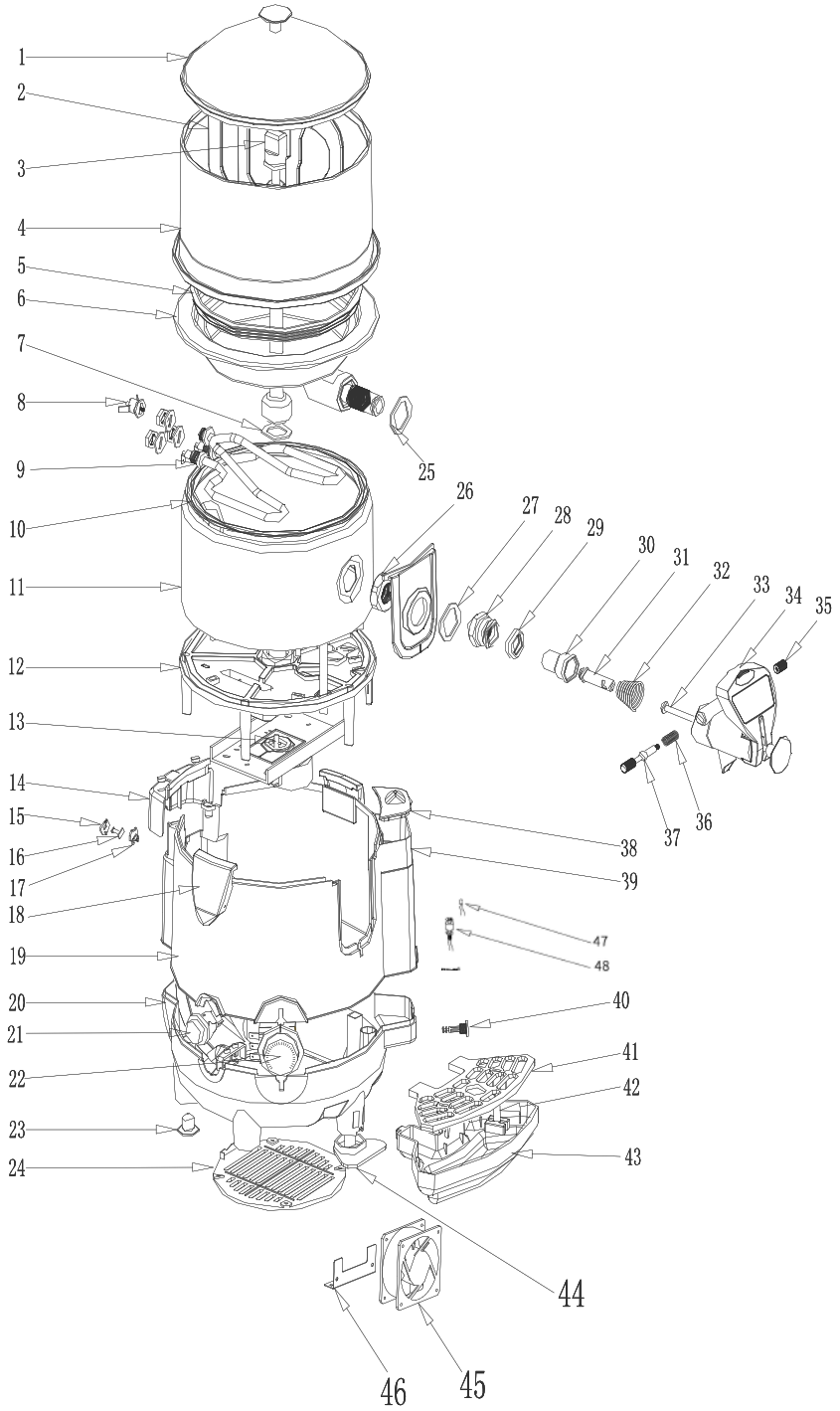

Parts Breakdown

Model DI-CN-0005 39482

Item No.	Description	Position	Item No.	Description	Position	Item No.	Description	Position
73902	Tank Cover for 39482	1-A	AK781	Button of Overheat Protector for 39482	16	73936	Cleaner Shaft for 39482	33
AP808	Knob of Tank Lid for 39482	1-B	73920	Button Stop of Protector for 39482	17	73937	Tap Handle for 39482	34
76453	Paddle for 39482	2	AK783	Tank Hinge for 39482	18	73938	Screw of Faucet for 39482	35
AL383	Lid of Stirring Rod for 39482	3-A	73922	Upper Exterior for 39482	19	73939	Pin Spring for 39482	36
AK768	Stirring Rod for 39482	3-B	73923	Lower Exterior for 39482	20	73940	Pin for 39482	37
76456	PC Tank for 39482	4	AK786	Power Switch for 39482	21	73941	Lid of Water Bin for 39482	38
73908	Gasket of PC Tank for 39482	5	73925	Thermostat for 39482	22	73942	Water Bin for 39482	39
76458	Stainless Steel Boiler (Upper Part) for 39482	6	73926	Foot for 39482	23	73943	Drainage Plug for 39482	40
73910	Gasket for 39482	7	AK789	Ventilation Grill for 39482	24	73944	Lid of Water Tray for 39482	41
AK773	Overheat Protector for 39482	8	73928	Washer of Faucet (Interior) for 39482	25	27993	Float Indicator for 39482	42
AK774	Heater Element for 39482	9	73929	Nut of Faucet (Interior) for 39482	26	73946	Water Tray for 39482	43
73913	Boiler Gasket for 39482	10	76479	Gasket of Faucet for 39482	27	AK809	Forefoot for 39482	44
AK776	Electrical Stainless Steel Boiler (Lower Part) for 39482	11	73931	Nut of Faucet Exterior for 39482	28	AK810	Fan for 39482	45
73915	Supporter for 39482	12	73932	Gasket of Faucet Screw for 39482	29	73947	Supporter Off Fan for 39482	46
AK778	Motor for 39482	13	AK795	Gasket Inside the Faucet for 39482	30	AP810	Alarm Controller & Indicator Light for 39482	47
AK779	Back Cover for 39482	14	73934	Moving Pin for 39482	31	AP811	Float Switch for 39482	48
73918	Cover of Overheat Protector for 39482	15	73935	Faucet Spring for 39482	32			

Parts Breakdown

Model DI-CN-0010 31840

Item No.	Description	Position
73902	Tank Cover for 31840	1-A
AP808	Knob of Tank Lid for 31840	1-B
73904	Paddle for 31840	2
AL383	Lid of Stirring Rod for 31840	3-A
73906	Stirring Rod for 31840	3-B
73907	PC Tank for 31840	4
73908	Gasket of PC Tank for 31840	5
73909	Stainless Steel Boiler (Upper Part) for 31840	6
73910	Gasket for 31840	7
AK773	Overheat Protector for 31840	8
AK774	Heater Element for 31840	9
73913	Boiler Gasket for 31840	10
AK776	Electrical Stainless Steel Boiler (Lower Part) for 31840	11
73915	Supporter for 31840	12
AK778	Motor for 31840	13
AK779	Back Cover for 31840	14
73918	Cover of Overheat Protector for 31840	15

Item No.	Description	Position
AK781	Button of Overheat Protector for 31840	16
73920	Button Stop of Protector for 31840	17
AK783	Tank Hinge for 31840	18
73922	Upper Exterior for 31840	19
73923	Lower Exterior for 31840	20
AK786	Power Switch for 31840	21
73925	Thermostat for 31840	22
73926	Foot for 31840	23
AK789	Ventilation Grill for 31840	24
73928	Washer of Faucet (Interior) for 31840	25
73929	Nut of Faucet (Interior) for 31840	26
76479	Gasket of Faucet for 31840	27
73931	Nut of Faucet Exterior for 31840	28
73932	Gasket of Faucet Screw for 31840	29
AK795	Gasket Inside the Faucet for 31840	30
73934	Moving Pin for 31840	31
73935	Faucet Spring for 31840	32

Item No.	Description	Position
73936	Cleaner Shaft for 31840	33
73937	Tap Handle for 31840	34
73938	Screw of Faucet for 31840	35
73939	Pin Spring for 31840	36
73940	Pin for 31840	37
73941	Lid of Water Bin for 31840	38
73942	Water Bin for 31840	39
73943	Drainage Plug for 31840	40
73944	Lid of Water Tray for 31840	41
27993	Float Indicator for 31840	42
73946	Water Tray for 31840	43
AK809	Forefoot for 31840	44
AK810	Fan for 31840	45
73947	Supporter Off Fan for 31840	46
AP810	Alarm Controller & Indicator Light for 31840	47
AP811	Float Switch for 31840	48

Electrical Schematics

Model DI-CN-0005 39482
Model DI-CN-0010 31840

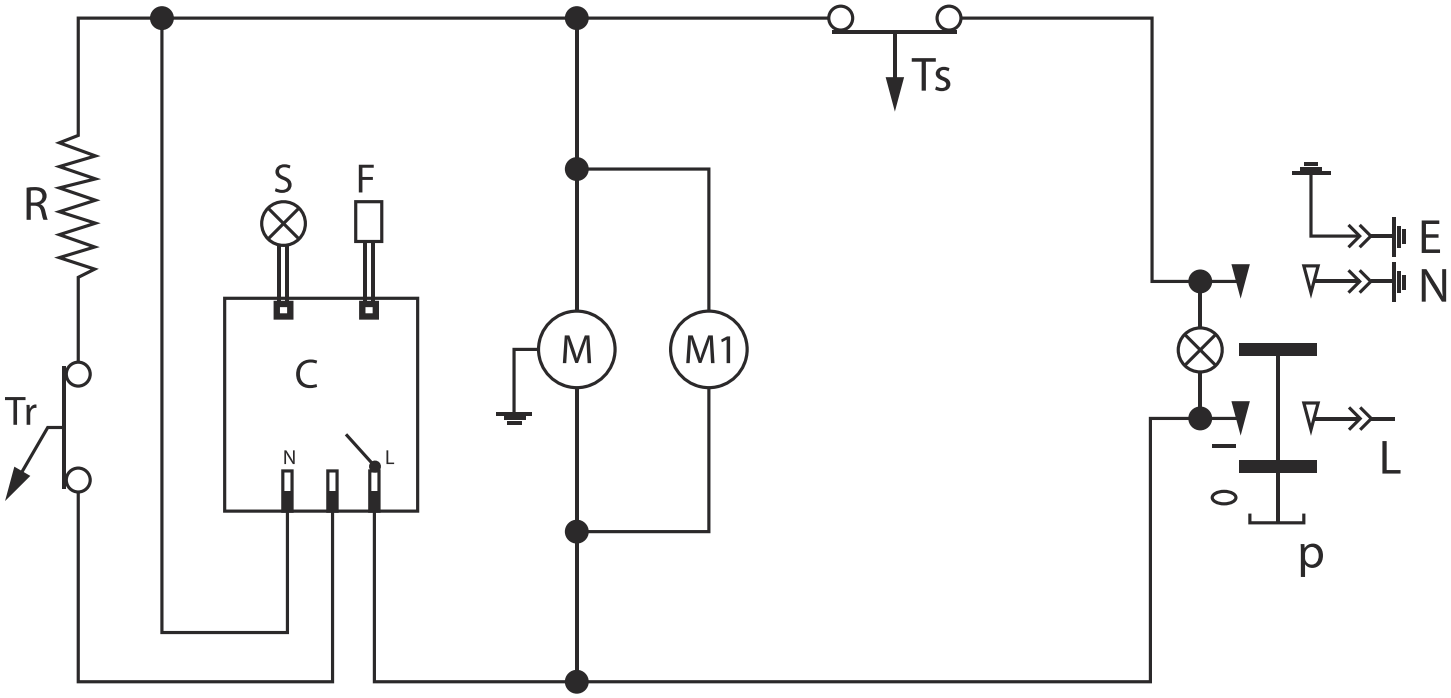

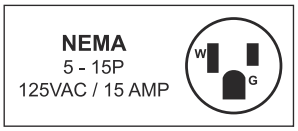

Position	Description	Position	Description
C	Level Controller	P	Main Power Switch
F	Float Switch	R	Heating Element
L	Signal Light	Tr	Adjustment Thermostat
M	Mixer Motor	Ts	Safety Thermostat
M1	Condenser Fan Motor		

Notes

Notes

Notes

Notes

Notes

Notes

Warranty Registration

Thank you for purchasing an Omcan product. To register your warranty for this product, complete the information below, tear off the card at the perforation and then send to the address specified below. You can also register online by visiting:

Merci d'avoir acheté un produit Omcan. Pour enregistrer votre garantie pour ce produit, complétez les informations ci-dessous, détachez la carte au niveau de la perforation, puis l'envoyer à l'adresse spécifié ci-dessous. Vous pouvez également vous inscrire en ligne en visitant:

Gracias por comprar un producto Omcan usted. Para registrar su garantía para este producto, complete la información a continuación, cortar la tarjeta en la perforación y luego enviarlo a la dirección indicada a continuación. También puede registrarse en línea en:

https://omcan.com/warranty-registration/

For mailing in Canada

Pour postale au Canada

Por correo en Canadá

OMCAN
PRODUCT WARRANTY REGISTRATION
3115 Pepper Mill Court,
Mississauga, Ontario
Canada, L5L 4X5

For mailing in the US

Pour diffusion aux États-Unis

Por correo en los EE.UU.

OMCAN
PRODUCT WARRANTY REGISTRATION
4450 Witmer Industrial Estates, Unit 4,
Niagara Falls, New York
USA, 14305

or email to: service@omcan.com

Purchaser's Information

Name: _____

Address: _____

City: _____ Province or State: _____ Postal or Zip: _____

Country: _____

Dealer from which Purchased: _____

Dealer City: _____ Dealer Province or State: _____

Invoice: _____

Company Name: _____

Telephone: _____

Email Address: _____

Type of Company:

☐ Restaurant ☐ Bakery ☐ Deli

☐ Butcher ☐ Supermarket ☐ Caterer

☐ Institution *(specify)*: _____

☐ Other *(specify)*: _____

Model Name: _____ Model Number: _____ Serial Number: _____

Machine Description: _____

Date of Purchase (MM/DD/YYYY): _____ Date of Installation (MM/DD/YYYY): _____

Would you like to extend the warranty? ☐ Yes ☐ No

Thank you for choosing Omcan | Merci d'avoir choisi Omcan | Gracias por elegir Omcan

Since 1951 Omcan has grown to become a leading distributor of equipment and supplies to the North American food service industry. Our success over these many years can be attributed to our commitment to strengthen and develop new and existing relationships with our valued customers and manufacturers. Today with partners in North America, Europe, Asia and South America, we continually work to improve and grow the company. We strive to offer customers exceptional value through our qualified local sales and service representatives who provide convenient access to over 6,500 globally sourced products.

Depuis 1951 Omcan a grandi pour devenir un des “leaders” de la distribution des équipements et matériel pour l’industrie des services alimentaires en Amérique du Nord. Notre succès au cours de ces nombreuses années peut être attribué à notre engagement à renforcer et à développer de nouvelles et existantes relations avec nos clients et les fabricants de valeur. Aujourd’hui avec des partenaires en Amérique du Nord, Europe, Asie et Amérique du Sud, nous travaillons continuellement à améliorer et développer l’entreprise. Nous nous efforçons d’offrir à nos clients une valeur exceptionnelle grâce à nos ventes locales qualifiées et des représentants de service qui offrent un accès facile à plus de 6500 produits provenant du monde entier.

Desde 1951 Omcan ha crecido hasta convertirse en un líder en la distribución de equipos y suministros de alimentos en América del Norte industria de servicios. Nuestro éxito en estos años se puede atribuir a nuestro compromiso de fortalecer y desarrollar nuevas relaciones existentes con nuestros valiosos clientes y fabricantes. Hoy con socios de América del Norte, Europa, Asia y América del Sur, que trabajan continuamente para mejorar y crecer la empresa. Nos esforzamos por ofrecer a nuestros clientes valor excepcional a través de nuestro local de ventas y representantes de los servicios que proporcionan un fácil acceso a más de 6,500 productos con origen a nivel mundial.