Refrigerated Prep Tables

Models PT-CN-0390, 0580-2, 0580

Items 39592, 48621, 41145

Instruction Manual

STOP

DO NOT RETURN THIS PRODUCT TO THE STORE

For questions or assistance with this product call OMCAN Toll Free: 1 800 465 0234 Customer Service or visit the Support section of www.omcan.com

Revised - 10/16/2026

QPS APPROVED

Toll Free: 1-800-465-0234
Fax: 905-607-0234
Email: service@omcan.com
www.omcan.com

MADE IN CHINA

Table of Contents

Model PT-CN-0390 / Model PT-CN-0580-2 / Model PT-CN-0580

Section	Page
Disclaimer	3
General Information	4 - 5
Safety and Warranty	5 - 7
Technical Specifications	8
Installation	8 - 9
Operation	9 - 10
Maintenance	10 - 11
Troubleshooting	11 - 12
Parts Breakdown	13 - 18
Electrical Schematics	19
Notes	20 - 22
Warranty Registration	23

Disclaimer

OMCAN IS NOT RESPONSIBLE FOR ANY DAMAGES DUE TO WATER LEAKS. WARRANTY FOR WATER LEAKS IS VOID IF THE AMBIENT ROOM TEMPERATURE EXCEEDS 75°F AND 55% RELATIVE HUMIDITY, AND THE APPLIANCE DRAIN IS NOT CONNECTED DIRECTLY TO A FLOOR DRAIN.

OMCAN N'EST PAS RESPONSABLE DES DOMMAGES DUS AUX FUITES D'EAU. LA GARANTIE POUR LES FUITES D'EAU EST ANNULÉE SI LA TEMPÉRATURE AMBIANTE DE LA PIÈCE DÉPASSE 75°F ET 55% D'HUMIDITÉ RELATIVE, ET SI LE DRAIN DE L'APPAREIL N'EST PAS RACCORDÉ DIRECTEMENT À UN DRAIN DE PLANCHER.

OMCAN NO SE HACE RESPONSABLE DE LOS DAÑOS CAUSADOS POR FUGAS DE AGUA. LA GARANTÍA POR FUGAS DE AGUA QUEDA ANULADA SI LA TEMPERATURA AMBIENTE SUPERA LOS 75°F Y EL 55% DE HUMEDAD RELATIVA, Y EL DESAGÜE DEL APARATO NO ESTÁ CONECTADO DIRECTAMENTE A UN DESAGÜE DE PISO.

General Information

Omcan Manufacturing and Distributing Company Inc., Food Machinery of America, Inc. dba Omcan and Omcan Inc. are not responsible for any harm or injury caused due to any person's improper or negligent use of this equipment. The product shall only be operated by someone over the age of 18, of sound mind, and not under the influence of any drugs or alcohol, who has been trained in the correct operation of this machine, and is wearing authorized, proper safety clothing. Any modification to the machine voids any warranty, and may cause harm to individuals using the machine or in the vicinity of the machine while in operation.

CHECK PACKAGE UPON ARRIVAL

Upon receipt of an Omcan shipment please inspect for external damage. If no damage is evident on the external packaging, open carton to ensure all ordered items are within the box, and there is no concealed damage to the machine. If the package has suffered rough handling, bumps or damage (visible or concealed), please note it on the bill of lading before accepting the delivery and contact Omcan within 24 hours, so we may initiate a claim with the carrier. A detailed report on the extent of the damage caused to the machine must be filled out within three days, from the delivery date shown in the shipping documents. Omcan has no recourse for damaged products that were shipped collect or third party.

Before operating any equipment, always read and familiarize yourself with all operation and safety instructions.

Omcan would like to thank you for purchasing this machine. It's of the utmost importance to save these instructions for future reference. Also save the original box and packaging for shipping the equipment if servicing or returning of the machine is required.

Omcan Fabrication et distribution Companie Limité et Food Machinery d'Amerique, dba Omcan et Omcan Inc. ne sont pas responsables de tout dommage ou blessure causé du fait que toute personne ait utilisé cet équipement de façon irrégulière. Le produit ne doit être exploité que par quelqu'un de plus de 18 ans, saine d'esprit, et pas sous l'influence d'une drogue ou d'acohol, qui a été formé pour utiliser cette machine correctement, et est vêtu de vêtements de sécurité approprié. Toute modification de la machine annule toute garantie, et peut causer un préjudice à des personnes utilisant la machine ou des personnes à proximité de la machine pendant son fonctionnement.

VÉRIFIEZ LE COLIS DÈS RÉCEPTION

Dès réception d'une expédition d'Omcan veuillez inspecter pour dommages externes. Si aucun dommage n'est visible sur l'emballage externe, ouvrez le carton afin de s'assurer que tous les éléments commandés sont dans la boîte, et il n'y a aucun dommage dissimulé à la machine. Si le colis n'a subi aucune mauvaises manipulations, de bosses ou de dommages (visible ou cachée), notez-le sur le bond de livraison avant d'accepter la livraison et contactez Omcan dans les 24 heures qui suivent, pour que nous puissions engager une réclamation auprès du transporteur. Un rapport détaillé sur l'étendue des dommages causés à la machine doit être rempli dans un délai de trois jours, à compter de la date de livraison indiquée dans les documents d'expédition. Omcan n'a aucun droit de recours pour les produits endommagés qui ont été expédiées ou cueilli par un tiers transporteur.

Avant d'utiliser n'importe quel équipement, toujours lire et vous familiariser avec toutes les opérations et les

General Information

consignes de sécurité.

Omcan voudrais vous remercier d'avoir choisi cette machine. Il est primordial de conserver ces instructions pour une référence ultérieure. Également conservez la boîte originale et l'emballage pour l'expédition de l'équipement si l'entretien ou le retour de la machine est nécessaire.

Omcan Empresa De Fabricacion Y Distribucion Inc. Y Maquinaria De Alimentos De America, Inc. dba Omcan y Omcan Inc. no son responsables de ningun daño o perjuicío causado por cualquier persona inadecuada o el uso descuidado de este equipo. El producto solo podra ser operado por una persona mayor de 18 años, en su sano juicio y no bajo alguna influencia de droga o alcohol, y que este ha sido entrenado en el correcto funcionamiento de esta máquina, y ésta usando ropa apropiada y autorizada. Cualquier modificación a la máquina anúla la garantía y puede causar daños a las personas usando la máquina mientras esta en el funcionamiento.

REVISE EL PAQUETE A SU LLEGADA

Tras la recepcion de un envio Omcan favor inspeccionar daños externos. Si no hay daños evidentes en el empaque exterior, Habra el carton para asegurararse que todos los articulos solicitados ésten dentro de la caja y no encuentre daños ocultos en la máquina. Si el paquete ha sufrido un manejo de poco cuidado, golpes o daños (visible o oculto) por favor anote en la factura antes de aceptar la entrega y contacte Omcan dentro de las 24 horas, de modo que podamos iniciar una reclamación con la compañia. Un informe detallado sobre los daños causados a la máquina debe ser llenado en el plazo de tres días, desde la fecha de entrega que se muestra en los documentos de envío. Omcan no tiene ningun recurso por productos dañados que se enviaron a recoger por terceros.

Antes de utilizar cualquier equipo, siempre lea y familiarizarse con todas las instrucciones de funcionamiento y seguridad.

Omcan le gustaría darle las gracias por la compra de esta máquina. Es de la mayor importancia para salvar estas instrucciones para futuras consultas. Además, guarda la caja original y el embalaje para el envío del equipo si servicio técnico o devolución de la máquina que se requiere.

Safety and Warranty

Position on a flat, stable surface. A service agent/qualified technician should carry out installation and any repairs if required. Do not remove any components or service panels on this product. Consult Local and National Standards to comply with the following:

- Health and Safety at Work Legislation.
- Fire Precautions.
- IEE Wiring Regulations.
- Building Regulations.

Safety and Warranty

The appliance is intended for commercial use.

- DO NOT attempt to service the item yourself.
- DO NOT use damaged appliances. If you are in any doubt, consult Omcan.
- DO NOT use electrical appliances inside the appliance (e.g. heaters, ice-cream makers etc.), unless they are of the type recommended by the manufacturer.
- Keep ventilation openings, in the appliance enclosure or in the built-in structure, clear of obstruction.
- DO NOT use mechanical device or other means to accelerate the defrosting process, other than those recommended by the manufacturer.
- DO NOT damage the refrigerant circuit.
- DO NOT stand or support yourself on the appliance or glass panel.
- DO NOT allow oil or fat to come into contact with the plastic components. Clean immediately if contact occurs.
- DO NOT place combustion, explosive or volatile article, corrosive acid or alkali, or liquid into the unit.
- DO NOT use this appliance to store medical supplies.
- DO NOT use jet/pressure washers to clean the appliance.
- DO NOT allow children to play with the packaging, and destroy plastic bags safely.
- Always carry, store and handle the appliance in a vertical position and move by holding the base of the appliance.
- Always switch off and disconnect the power supply to the unit before cleaning.
- Keep all packaging away from children. Dispose of the packaging in accordance with the regulations of local authorities.
- If the supply cord is damaged, it must be replaced by the manufacturer, its service agent or similarly qualified persons in order to avoid a hazard.
- This appliance is not intended for use by persons (including children) with reduced physical, sensory or mental capabilities, or lack of experience and knowledge, unless they have been given supervision or instruction concerning use of the appliance by a person responsible for their safety.
- Children should be supervised to ensure that they do not play with the appliance.
- For indoor used only. Not suitable for installation in an area where a water jet could be used. Must not be cleaned by a water jet.
- To guarantee safe operation, ensure that the appliance is set up and connected as described in the instruction manual.
- Any repairs and work on the appliance should only be carried out by the customer service department.
- Do not store explosive substances such as aerosol cans with a flammable propellant in this appliance.

OMCAN IS NOT RESPONSIBLE FOR DIMINISHED COOLING OR ANY DAMAGES DUE TO WATER LEAKS. WARRANTY FOR WATER LEAKS IS VOID IF THE AMBIENT ROOM TEMPERATURE EXCEEDS 75°F AND 55% RELATIVE HUMIDITY, AND THE APPLIANCE DRAIN IS NOT CONNECTED DIRECTLY TO A FLOOR DRAIN.

RESIDENTIAL USERS: vendor assumes no liability for parts or labor coverage for component failure or other damages resulting from installation in non-commercial or residential applications. The right is reserved to deny shipment for residential usage; if this occurs, you will be notified as soon as possible.

1 YEAR PARTS AND LABOUR WARRANTY

Within the warranty period, contact Omcan Inc. at 1-800-465-0234 to schedule an Omcan authorized service

technician to repair the equipment locally.

Unauthorized maintenance will void the warranty. Warranty covers electrical and part failures, not improper use.

Please see https://omcan.com/disclaimer for complete info.

WARNING:

The packaging components are classified as normal solid urban waste and can therefore be disposed of without difficulty.

In any case, for suitable recycling, we suggest disposing of the products separately (differentiated waste) according to the current norms.

DO NOT DISCARD ANY PACKAGING MATERIALS IN THE ENVIRONMENT!

Technical Specifications

Model	PT-CN-0390	PT-CN-0580-2	PT-CN-0580
Item Number	39592	48621	41145
Temperature Range	-2 to 8°C / 28.4 to 46.4°F		
Max Ambient Temp Rating	24°C / 75°F		
Electrical	110-120V / 60Hz / 1		
Capacity Power	190 W	290 W	
Input Power	170 W	210 W	
Refrigerant	R290		
Energy Consumption	2 kWh/day		
Capacity	390 L / 13.8 cu.ft.	580 L / 20.5 cu.ft.	580 L / 20.5 cu.ft.
Granite Thickness	1.2” / 30mm		
Partition Width	17.1” / 435mm	29.4” / 746mm	17.1” / 435mm
Overall Interior Cabinet Width	37.2” / 945mm	61.5” / 1562mm	
Number of Shelves	2	N/A	3
Dimensions	59.4” x 31.5” x 39.4” 1510 x 800 x 1000mm	79.5” x 31.5” x 39.4” 2020 x 800 x 1000 mm	
Packaging Dimensions	64.2” x 36.2” x 40.2” 1630 x 920 x 1020mm	84.3” x 36.2” x 40.2” 2140 x 920 x 1020mm	
Weight	478.4 lbs. / 217 kgs.	544.5 lbs. / 247 kgs.	542.3 lbs. / 246 kgs.
Packaging Weight	556 lbs. / 252.2 kgs.	683.4 lbs. / 310 kgs.	681.2 lbs. / 309 kgs.

Installation

POSITIONING

Ensure that in respect of the unit dimensions, the space around the unit is suitable for both operation and easy maintenance. Place the cabinet on a flat and level surface with it’s adjustable legs. If the unit has been placed on its side, please keep the machine inactive for 2 hours so the condenser fluid can settle. Do not position close to any heat source, explosives or in the path of direct sunlight. Air circulation must be freely maintained around the condensing unit. Failure to follow the above will cause damage to the unit and void the warranty.

Installation

ELECTRICAL CONNECTION

Check that the supply conforms to the requirements shown on the rating label. The connection must be grounded. The supply cable should never be stretched or pinched, keep the cable away from contact with liquids or heat sources. In the even of damage it must be replaced by Omcan.

BRACKET ASSEMBLY FOR TOPPING RAILS (OPTIONAL)

1. Using the screws to fix the three pieces of brackets on the bottom of your refrigerated topping rail.

2. Put the topping rail unit on the granite top of the pizza prep table, and the brackets should be placed as following pictures.

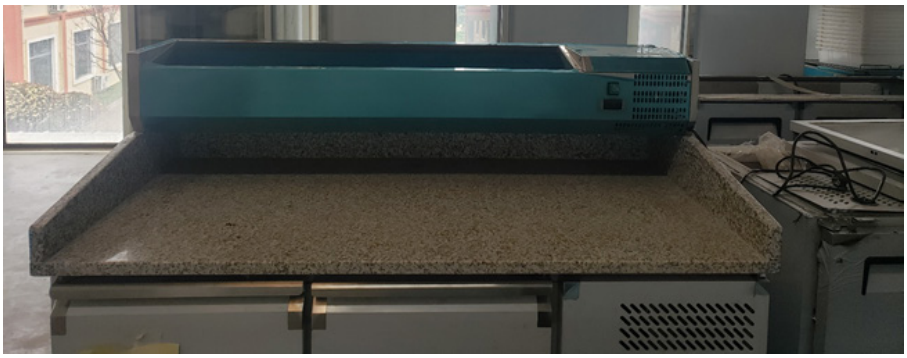

Operation

Turn on the unit by the switch, the control panel will display the current temperature inside the cabinet.

Operation

SETTING THE TEMPERATURE

By pressing the “SEL” button for one second, you will be able to read the set temperature. To change the temperature, press “SEL” and then press the “UP” or “DOWN” arrows to either increase or decrease the temperature as desired, confirm the new temperature by pressing “SEL”.

STORAGE OF FOODSTUFFS

In order to obtain the best possible function of the cabinet, it is necessary to observe the following:

- Place the merchandise into the unit only after it has achieved the desired operating temperature on the display.
- Do not place uncovered hot foods or liquids inside the unit.
- Package or protect foods when possible.
- Do not block the air circulation with the foodstuffs.
- Avoid opening the doors/drawers for extended periods.
- Wait a few moments before reopening the doors/drawers once they have been opened.
- While stocking, only open and fill one drawer at a time to eliminate the risk of over balancing.

DEFROSTING

DEFROST TIMER

The electronic control panel automatically defrosts 4 times every 24 hours. The timer will reset to the time of the initial start up. To modify the start time, press “DEF” for more than 5 seconds and the cycle will begin immediately and continue 4 times every 24 hours.

Maintenance

INITIAL CLEANING

Before use, all parts of the cabinet should be cleaned.
For the walls and all the internal parts: use an antibacterial detergent.
For the plastic parts: use a moistened cloth.
Dry with a soft, clean cloth. Use little to no water.
Do not use harsh or abrasive solvents or detergent.
Always wear protective gloves when cleaning.

PERIODIC CLEANING

For hygienic reasons and for improved performance, clean the internal basin at least once a week. To do so, perform a defrost timer reset, when the defrost has completed, turn off the power and unplug the unit. Clean the unit as stated in “Initial Cleaning”.

Maintenance

CLEANING OF CONDENSER

For improved performance, clean the condenser at least once a week. Before cleaning, turn off the machine and disconnect from the power supply.

- Unscrew, rotate and remove the protective grill.
- Remove the dust on the front surface by using a brush and a vacuum cleaner, then reattach the protective grill.

PERIODS OF INACTIVITY

During periods of inactivity, remove all products from inside the cabinet and follow these instructions.

- Remove the plug from the power supply and carefully clean the unit as stated in “Periodic Cleaning”.
- Cover the cabinet with a cloth that allows air circulation in the interior.

Troubleshooting

Often, the malfunction of the unit is due to a simple cause and can be easily fixed without contacting Omcan for technical support. Please check the following:

If the cabinet does not operate, make sure that:

- The plug has been correctly inserted into the socket.
- The supply cord is not damaged.

If the required temperature is not reached, make sure that:

- The command switch is turned on.
- The electronic control panel is correctly regulated.
- The cabinet is not in the defrosting phase or the post defrosting phase.
- The evaporator is not covered with frost.
- The condenser is not blocked with dust.
- The cabinet is not located near heat sources or its condensing unit has uninterrupted air flow.
- The stored foods or other objects do not inhibit the proper closing of the unit.
- The cabinet is not working in proper working conditions (overloaded, hot food, blocked circulation, ect.).

If the cabinet leaks water, make sure that:

- The collecting container, or the device for condensing water elimination are not damaged.
- The discharge outlets are not blocked or obstructed.
- The cabinet has been properly levelled.
- The door seal heater is operating.

If the cabinet is unusually noisy, make sure that:

- The frame does not have any loose screws or bolts.
- The cabinet has been place in a flat, stable position.

Troubleshooting

If after all the above has been followed that the malfunction continues, it is advised that you call Omcan for service. Be prepared to supply the following information:

- The model name.
- The item number.
- The serial number.
- The error code being displayed on the control panel.

All spare parts must be replaced by Omcan or an Omcan authorised service company.

Parts Breakdown

Model PT-CN-0390 39592

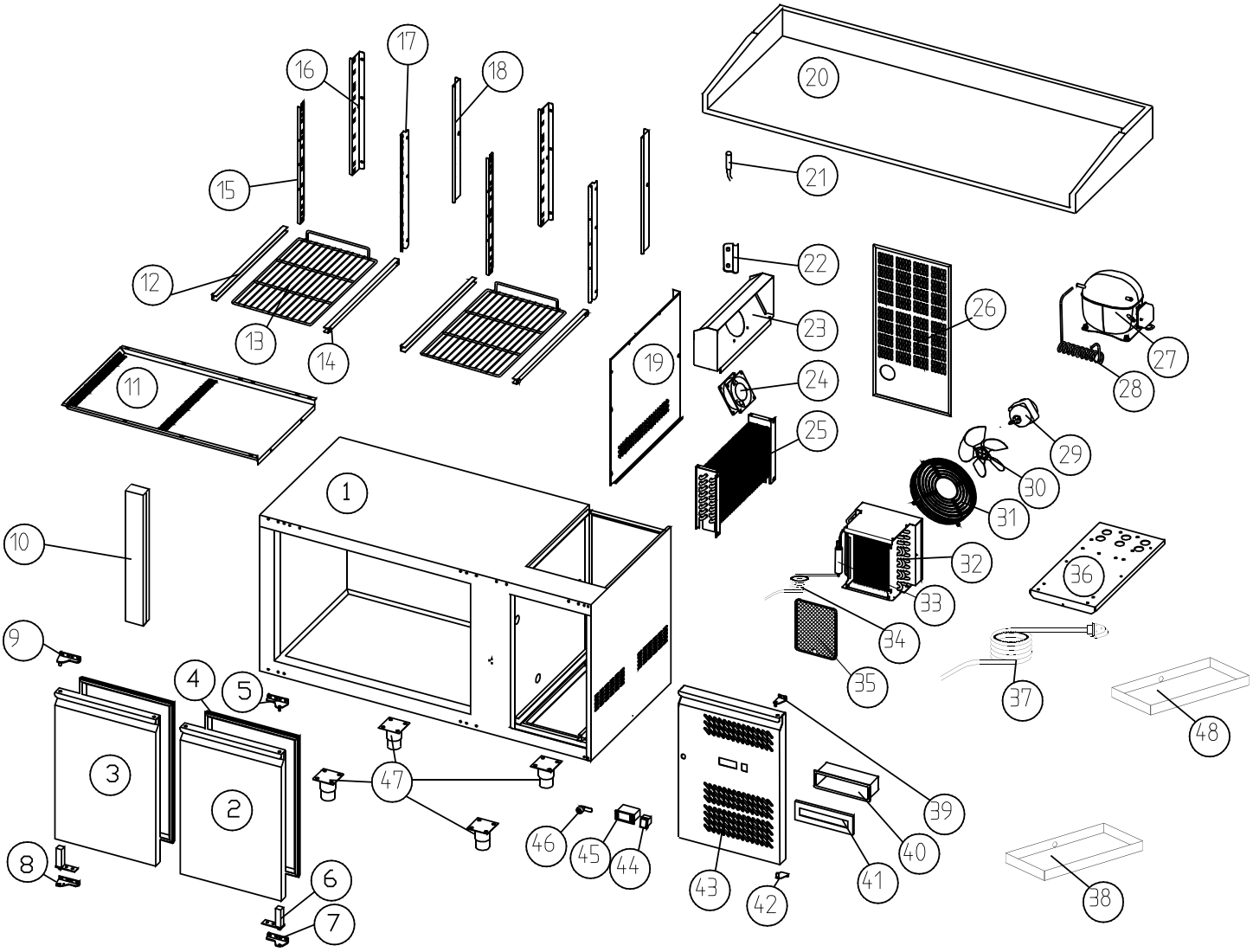

Parts Breakdown

Model PT-CN-0390 39592

Item No.	Description	Position
AF205	Body for 39592	1
AF206	Door Right for 39592	2
AF207	Door Left for 39592	3
AF208	Gasket for 39592	4
AF209	Up Hinge Right for 39592	5
AF210	Door Spring for 39592	6
AF211	Down Hinge Right for 39592	7
AF212	Down Hinge Left for 39592	8
AF213	Up Hinge Left for 39592	9
AF214	Fixed Front Panel for 39592	10
AF215	Air Flow Conduct Board for 39592	11
AF216	Set Guide Left for 39592	12
AF217	Shelf for 39592	13
AF218	Set Guide Right for 39592	14
AF219	Front Support Left for 39592	15
AF220	Back Support Left for 39592	16

Item No.	Description	Position
AF221	Front Support Right for 39592	17
AF222	Back Support Right for 39592	18
AF223	Evaporator Cover for 39592	19
AF224	Top for 39592	20
AF225	Sensor for 39592	21
AF226	Probe Padding for 39592	22
AF227	Fan Support for 39592	23
AD825	Condenser Fan for 39592	24
AF228	Evaporator for 39592	25
AE752	Grill for 39592	26
AF229	Compressor for 39592	27
AF230	Hot Pipe for 39592	28
AF231	Condenser Fan for 39592	29
AF232	Condenser Fan Blade for 39592	30
AF233	Basket Guard Grills for 39592	31
AF234	Condenser for 39592	32

Item No.	Description	Position
AF235	Filter Drier for 39592	33
AF236	Capillary for 39592	34
AF237	Filter for 39592	35
AF238	Unit Board for 39592	36
AD819	Power Cord for 39592	37
AF239	Water Box for 39592	38
AF240	Front Panel Up Hinge for 39592	39
AF241	Water Box Protector for 39592	40
AF242	Clip for 39592	41
AF243	Front Panel Down Hinge for 39592	42
AF244	Front Panel for 39592	43
AD829	Main Switch for 39592	44
AD818	Thermostat for 39592	45
AF245	Lock for 39592	46
AF246	Foot for 39592	47
AF247	Water Box for 39592	48

Parts Breakdown

Model PT-CN-0580-2 48621

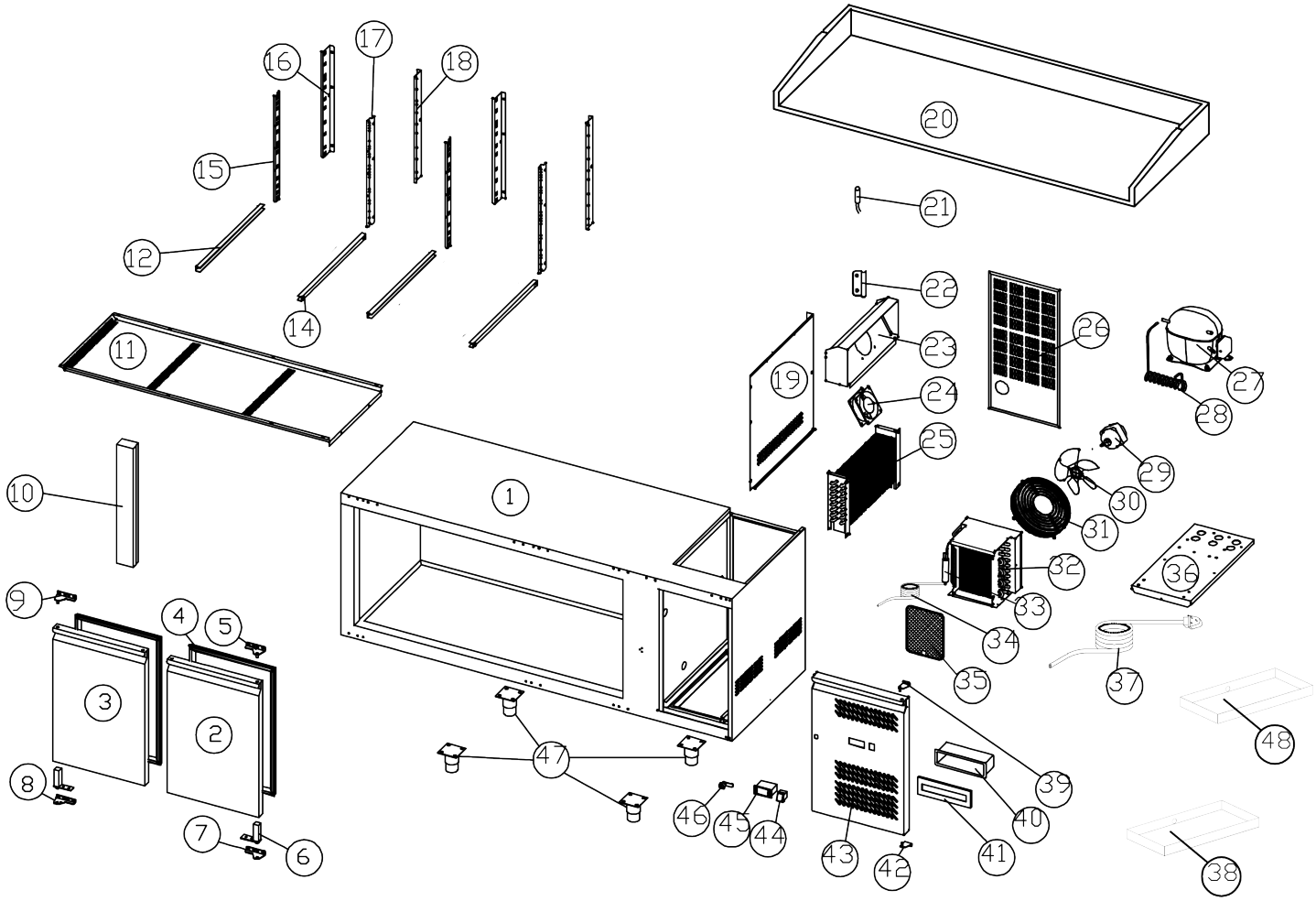

Parts Breakdown

Model PT-CN-0580-2 48621

Item No.	Description	Position
AM476	Foaming Cabinet for 48621	1
AM477	Foaming Door - Right for 48621	2
AM478	Foaming Door - Left for 48621	3
AM479	Door Gasket for 48621	4
AM480	Top Hinge - Right for 48621	5
AF210	Door Spring for 48621	6
AM481	Bottom Hinge - Right for 48621	7
AM482	Bottom Hinge - Left for 48621	8
AM483	Top Hinge - Left for 48621	9
AF214	Fixed Front Panel for 48621	10
AF251	Air Flow Conduct Board for 48621	11
AF216	Set Guide Left for 48621	12
AF218	Set Guide Right for 48621	14
AF219	Front Support Left for 48621	15
AF220	Back Support Left for 48621	16
AF221	Front Support Right for 48621	17

Item No.	Description	Position
AM485	Shelf Support Strip - Right Rear for 48621	18
AF223	Evaporator Cover for 48621	19
AE751	Marble Countertop for 48621	20
AF225	Sensor for 48621	21
AF226	Probe Padding for 48621	22
AF227	Fan Support for 48621	23
AD825	Condenser Fan for 48621	24
AF228	Evaporator for 48621	25
AM486	Compressor Room Cover for 48621	26
AM487	Compressor for 48621	27
AF230	Hot Pipe for 48621	28
AM488	Condenser Fan for 48621	29
AM489	Condenser Fan Blade for 48621	30
AM490	Grill of Condenser Fan for 48621	31
AM491	Condenser for 48621	32
AF235	Filter Drier for 48621	33

Item No.	Description	Position
AF236	Capillary for 48621	34
AF237	Filter for 48621	35
AM492	Installation Board of Compressor Set for 48621	36
AD819	Power Cord for 48621	37
AM493	Drain Pan of Evaporator for 48621	38
AM494	Top Hinge of Control Panel for 48621	39
AF241	Water Box Protector for 48621	40
AF242	Clip for 48621	41
AM495	Bottom Hinge of Control Panel for 48621	42
AM496	Control Panel for 48621	43
AD829	Main Switch for 48621	44
AD818	Thermostat for 48621	45
AF245	Lock for 48621	46
AM497	Foot for 48621	47
AM498	Foot for 48621	47
AF247	Water Box for 48621	48

Parts Breakdown

Model PT-CN-0580 41145

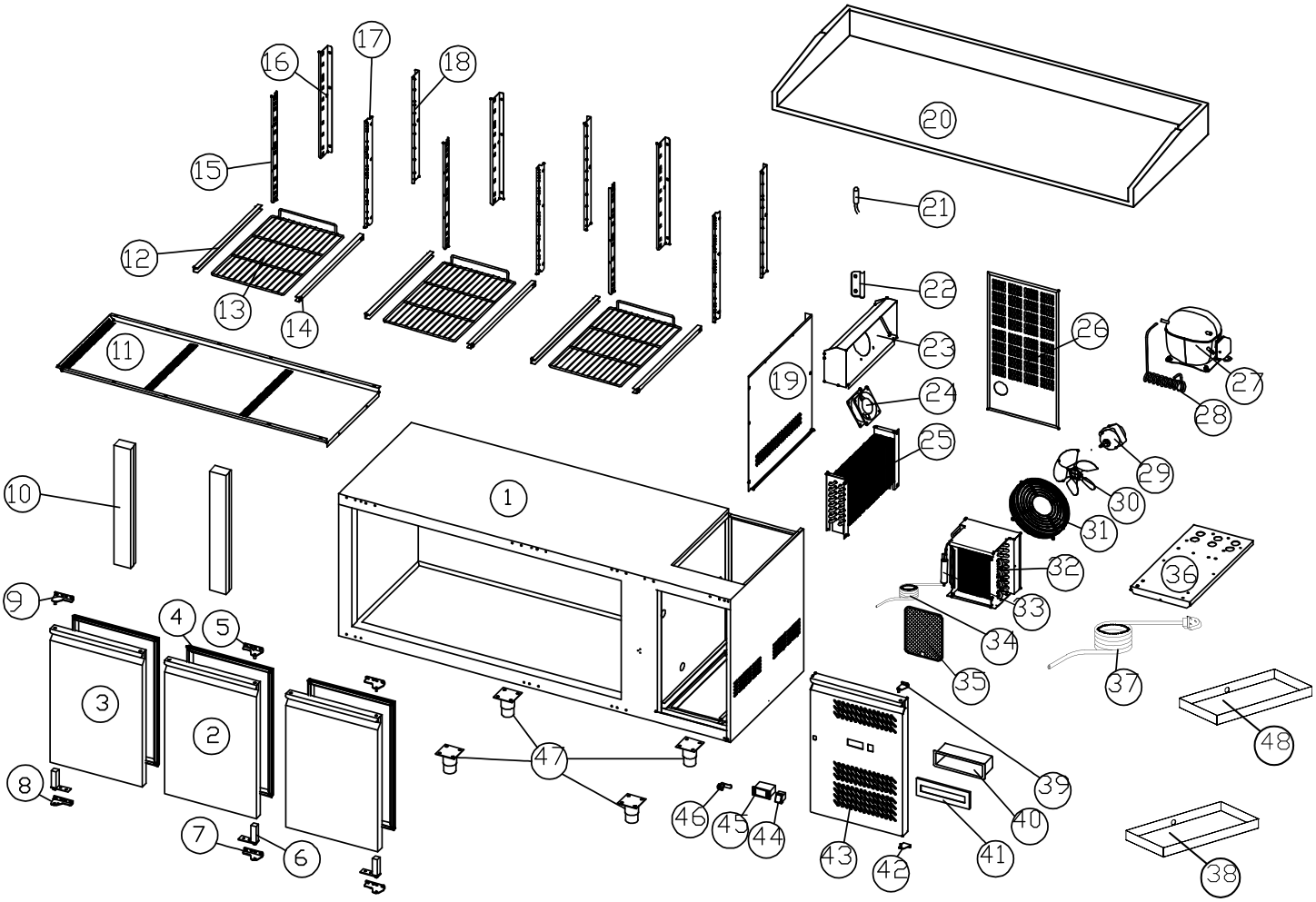

Parts Breakdown

Model PT-CN-0580 41145

Item No.	Description	Position
AF248	Body for 41145	1
AF249	Door Right for 41145	2
AF250	Door Left for 41145	3
AF208	Gasket for 41145	4
AF209	Up Hinge Right for 41145	5
AF210	Door Spring for 41145	6
AF211	Down Hinge Right for 41145	7
AF212	Down Hinge Left for 41145	8
AF213	Up Hinge Left for 41145	9
AF214	Fixed Front Panel for 41145	10
AF251	Air Flow Conduct Board for 41145	11
AF216	Set Guide Left for 41145	12
AF217	Shelf for 41145	13
AF218	Set Guide Right for 41145	14
AF219	Front Support Left for 41145	15
AF220	Back Support Left for 41145	16

Item No.	Description	Position
AF221	Front Support Right for 41145	17
AF222	Back Support Right for 41145	18
AF223	Evaporator Cover for 41145	19
AE751	Marble Countertop for 41145	20
AF225	Sensor for 41145	21
AF226	Probe Padding for 41145	22
AF227	Fan Support for 41145	23
AD825	Condenser Fan for 41145	24
AF228	Evaporator for 41145	25
AE752	Grill for 41145	26
AF252	Compressor for 41145	27
AF230	Hot Pipe for 41145	28
AF231	Condenser Fan for 41145	29
AF232	Condenser Fan Blade for 41145	30
AF233	Basket Guard Grills for 41145	31
AF234	Condenser for 41145	32

Item No.	Description	Position
AF235	Filter Drier for 41145	33
AF236	Capillary for 41145	34
AF237	Filter for 41145	35
AF238	Unit Board for 41145	36
AD819	Power Cord for 41145	37
AF239	Water Box for 41145	38
AF240	Front Panel Up Hinge for 41145	39
AF241	Water Box Protector for 41145	40
AF242	Clip for 41145	41
AF243	Front Panel Down Hinge for 41145	42
AF244	Front Panel for 41145	43
AD829	Main Switch for 41145	44
AD818	Thermostat for 41145	45
AF245	Lock for 41145	46
AF246	Foot for 41145	47
AF247	Water Box for 41145	48

Electrical Schematics

Model PT-CN-0390 39592
Model PT-CN-0580-2 48621
Model PT-CN-0580 41145

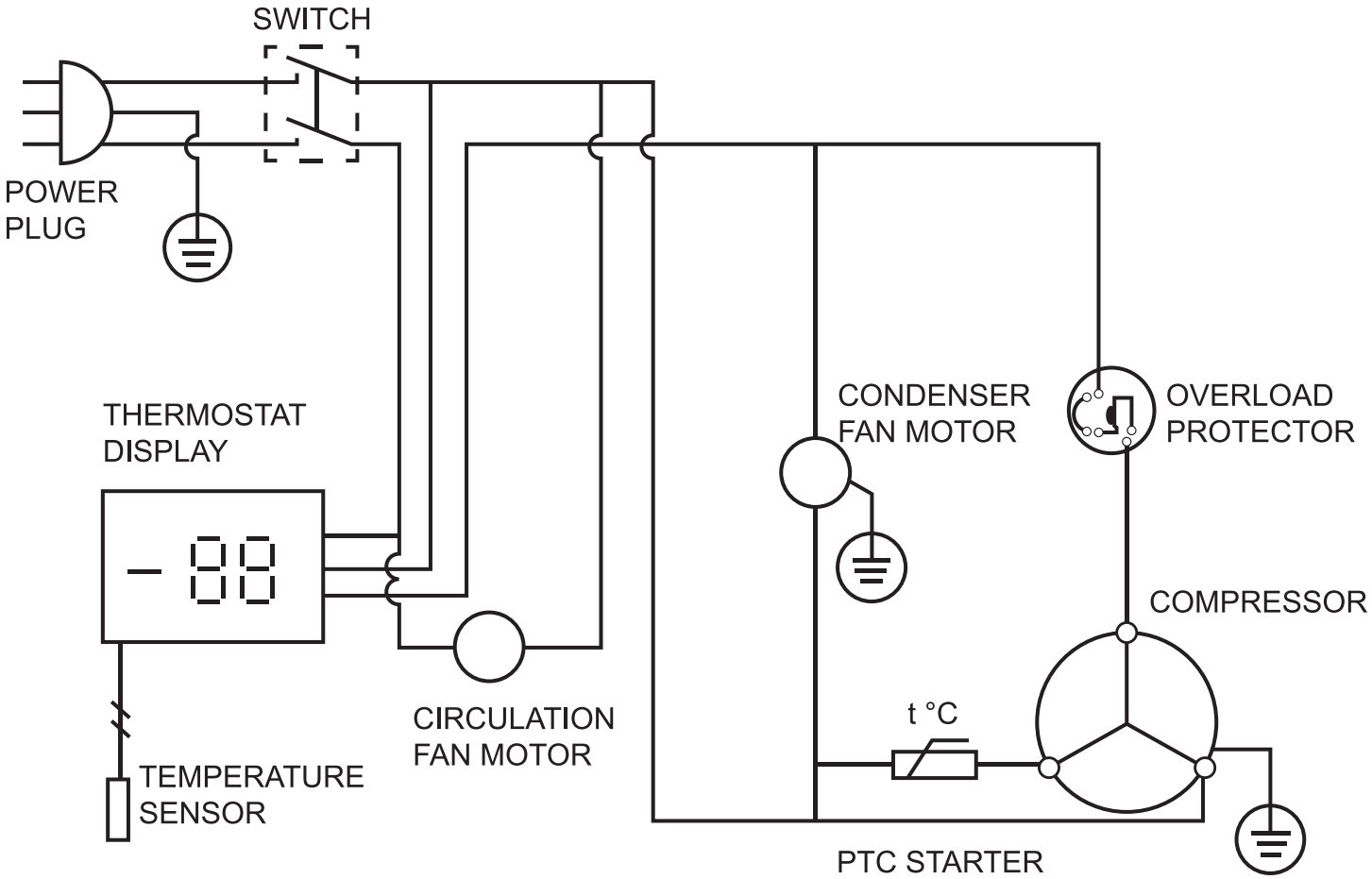

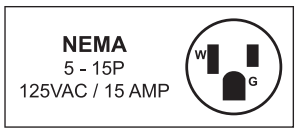

Notes

Notes

Notes

Warranty Registration

Thank you for purchasing an Omcan product. To register your warranty for this product, complete the information below, tear off the card at the perforation and then send to the address specified below. You can also register online by visiting:

Merci d'avoir acheté un produit Omcan. Pour enregistrer votre garantie pour ce produit, complétez les informations ci-dessous, détachez la carte au niveau de la perforation, puis l'envoyer à l'adresse spécifié ci-dessous. Vous pouvez également vous inscrire en ligne en visitant:

Gracias por comprar un producto Omcan usted. Para registrar su garantía para este producto, complete la información a continuación, cortar la tarjeta en la perforación y luego enviarlo a la dirección indicada a continuación. También puede registrarse en línea en:

https://omcan.com/warranty-registration/

For mailing in Canada

Pour postale au Canada

Por correo en Canadá

OMCAN
PRODUCT WARRANTY REGISTRATION
3115 Pepper Mill Court,
Mississauga, Ontario
Canada, L5L 4X5

For mailing in the US

Pour diffusion aux États-Unis

Por correo en los EE.UU.

OMCAN
PRODUCT WARRANTY REGISTRATION
4450 Witmer Industrial Estates, Unit 4,
Niagara Falls, New York
USA, 14305

or email to: service@omcan.com

Purchaser's Information

Name: _____

Address: _____

City: _____ Province or State: _____ Postal or Zip: _____

Country: _____

Dealer from which Purchased: _____

Dealer City: _____ Dealer Province or State: _____

Invoice: _____

Company Name: _____

Telephone: _____

Email Address: _____

Type of Company:

☐ Restaurant ☐ Bakery ☐ Deli

☐ Butcher ☐ Supermarket ☐ Caterer

☐ Institution *(specify)*: _____

☐ Other *(specify)*: _____

Model Name: _____ Model Number: _____

Serial Number: _____

Machine Description: _____

Date of Purchase (MM/DD/YYYY): _____

Date of Installation (MM/DD/YYYY): _____

Would you like to extend the warranty? ☐ Yes ☐ No

Thank you for choosing Omcan | Merci d'avoir choisi Omcan | Gracias por elegir Omcan

Since 1951 Omcan has grown to become a leading distributor of equipment and supplies to the North American food service industry. Our success over these many years can be attributed to our commitment to strengthen and develop new and existing relationships with our valued customers and manufacturers. Today with partners in North America, Europe, Asia and South America, we continually work to improve and grow the company. We strive to offer customers exceptional value through our qualified local sales and service representatives who provide convenient access to over 6,500 globally sourced products.

Depuis 1951 Omcan a grandi pour devenir un des “leaders” de la distribution des équipements et matériel pour l’industrie des services alimentaires en Amérique du Nord. Notre succès au cours de ces nombreuses années peut être attribué à notre engagement à renforcer et à développer de nouvelles et existantes relations avec nos clients et les fabricants de valeur. Aujourd’hui avec des partenaires en Amérique du Nord, Europe, Asie et Amérique du Sud, nous travaillons continuellement à améliorer et développer l’entreprise. Nous nous efforçons d’offrir à nos clients une valeur exceptionnelle grâce à nos ventes locales qualifiées et des représentants de service qui offrent un accès facile à plus de 6500 produits provenant du monde entier.

Desde 1951 Omcan ha crecido hasta convertirse en un líder en la distribución de equipos y suministros de alimentos en América del Norte industria de servicios. Nuestro éxito en estos años se puede atribuir a nuestro compromiso de fortalecer y desarrollar nuevas relaciones existentes con nuestros valiosos clientes y fabricantes. Hoy con socios de América del Norte, Europa, Asia y América del Sur, que trabajan continuamente para mejorar y crecer la empresa. Nos esforzamos por ofrecer a nuestros clientes valor excepcional a través de nuestro local de ventas y representantes de los servicios que proporcionan un fácil acceso a más de 6,500 productos con origen a nivel mundial.