Refrigerated Showcases

Models RS-CN-0440, 0530, 0700, 1050, 0440-B, 0530-B, 0700-B, 1050-B

Items 48479, 43459, 41469, 43460, 48480, 48265, 48266, 48269

Instruction Manual



STOP

DO NOT RETURN THIS PRODUCT TO THE STORE

For questions or assistance with this product call OMCAN Toll Free:
1 800 465 0234
Customer Service
or
visit the Support section of
www.omcan.com

Revised - 10/21/2026

Toll Free: 1-800-465-0234
Fax: 905-607-0234
Email: service@omcan.com
www.omcan.com

MADE IN CHINA

Table of Contents

Model RS-CN-0440 / Model RS-CN-0530 / Model RS-CN-0700
Model RS-CN-1050 / Model RS-CN-0440-B / Model RS-CN-0530-B
Model RS-CN-0700-B / Model RS-CN-1050-B

Section	Page
Disclaimer	3
General Information	4 - 5
Safety and Warranty	5 - 7
Technical Specifications	8
Operation	9 - 10
Maintenance	10
Troubleshooting	10 - 11
Parts Breakdown	12 - 35
Electrical Schematics	36 - 39
Notes	40 - 42
Warranty Registration	43

Disclaimer

OMCAN IS NOT RESPONSIBLE FOR ANY DAMAGES DUE TO WATER LEAKS. WARRANTY FOR WATER LEAKS IS VOID IF THE AMBIENT ROOM TEMPERATURE EXCEEDS 75°F AND 55% RELATIVE HUMIDITY, AND THE APPLIANCE DRAIN IS NOT CONNECTED DIRECTLY TO A FLOOR DRAIN.

OMCAN N'EST PAS RESPONSABLE DES DOMMAGES DUS AUX FUITES D'EAU. LA GARANTIE POUR LES FUITES D'EAU EST ANNULÉE SI LA TEMPÉRATURE AMBIANTE DE LA PIÈCE DÉPASSE 75°F ET 55% D'HUMIDITÉ RELATIVE, ET SI LE DRAIN DE L'APPAREIL N'EST PAS RACCORDÉ DIRECTEMENT À UN DRAIN DE PLANCHER.

OMCAN NO SE HACE RESPONSABLE DE LOS DAÑOS CAUSADOS POR FUGAS DE AGUA. LA GARANTÍA POR FUGAS DE AGUA QUEDA ANULADA SI LA TEMPERATURA AMBIENTE SUPERA LOS 75°F Y EL 55% DE HUMEDAD RELATIVA, Y EL DESAGÜE DEL APARATO NO ESTÁ CONECTADO DIRECTAMENTE A UN DESAGÜE DE PISO.

General Information

Omcan Manufacturing and Distributing Company Inc., Food Machinery of America, Inc. dba Omcan and Omcan Inc. are not responsible for any harm or injury caused due to any person's improper or negligent use of this equipment. The product shall only be operated by someone over the age of 18, of sound mind, and not under the influence of any drugs or alcohol, who has been trained in the correct operation of this machine, and is wearing authorized, proper safety clothing. Any modification to the machine voids any warranty, and may cause harm to individuals using the machine or in the vicinity of the machine while in operation.

CHECK PACKAGE UPON ARRIVAL

Upon receipt of an Omcan shipment please inspect for external damage. If no damage is evident on the external packaging, open carton to ensure all ordered items are within the box, and there is no concealed damage to the machine. If the package has suffered rough handling, bumps or damage (visible or concealed), please note it on the bill of lading before accepting the delivery and contact Omcan within 24 hours, so we may initiate a claim with the carrier. A detailed report on the extent of the damage caused to the machine must be filled out within three days, from the delivery date shown in the shipping documents. Omcan has no recourse for damaged products that were shipped collect or third party.

Before operating any equipment, always read and familiarize yourself with all operation and safety instructions.

Omcan would like to thank you for purchasing this machine. It's of the utmost importance to save these instructions for future reference. Also save the original box and packaging for shipping the equipment if servicing or returning of the machine is required.

Omcan Fabrication et distribution Companie Limité et Food Machinery d'Amerique, dba Omcan et Omcan Inc. ne sont pas responsables de tout dommage ou blessure causé du fait que toute personne ait utilisé cet équipement de façon irrégulière. Le produit ne doit être exploité que par quelqu'un de plus de 18 ans, saine d'esprit, et pas sous l'influence d'une drogue ou d'acohol, qui a été formé pour utiliser cette machine correctement, et est vêtu de vêtements de sécurité approprié. Toute modification de la machine annule toute garantie, et peut causer un préjudice à des personnes utilisant la machine ou des personnes à proximité de la machine pendant son fonctionnement.

VÉRIFIEZ LE COLIS DÈS RÉCEPTION

Dès réception d'une expédition d'Omcan veuillez inspecter pour dommages externes. Si aucun dommage n'est visible sur l'emballage externe, ouvrez le carton afin de s'assurer que tous les éléments commandés sont dans la boîte, et il n'y a aucun dommage dissimulé à la machine. Si le colis n'a subi aucune mauvaises manipulations, de bosses ou de dommages (visible ou cachée), notez-le sur le bond de livraison avant d'accepter la livraison et contactez Omcan dans les 24 heures qui suivent, pour que nous puissions engager une réclamation auprès du transporteur. Un rapport détaillé sur l'étendue des dommages causés à la machine doit être rempli dans un délai de trois jours, à compter de la date de livraison indiquée dans les documents d'expédition. Omcan n'a aucun droit de recours pour les produits endommagés qui ont été expédiées ou cueilli par un tiers transporteur.

Avant d'utiliser n'importe quel équipement, toujours lire et vous familiariser avec toutes les opérations et les

General Information

consignes de sécurité.

Omcan voudrais vous remercier d'avoir choisi cette machine. Il est primordial de conserver ces instructions pour une référence ultérieure. Également conservez la boîte originale et l'emballage pour l'expédition de l'équipement si l'entretien ou le retour de la machine est nécessaire.

Omcan Empresa De Fabricacion Y Distribucion Inc. Y Maquinaria De Alimentos De America, Inc. dba Omcan y Omcan Inc. no son responsables de ningun daño o perjuicío causado por cualquier persona inadecuada o el uso descuidado de este equipo. El producto solo podra ser operado por una persona mayor de 18 años, en su sano juicio y no bajo alguna influencia de droga o alcohol, y que este ha sido entrenado en el correcto funcionamiento de esta máquina, y ésta usando ropa apropiada y autorizada. Cualquier modificación a la máquina anúla la garantía y puede causar daños a las personas usando la máquina mientras esta en el funcionamiento.

REVISE EL PAQUETE A SU LLEGADA

Tras la recepcion de un envio Omcan favor inspeccionar daños externos. Si no hay daños evidentes en el empaque exterior, Habra el carton para asegurararse que todos los articulos solicitados ésten dentro de la caja y no encuentre daños ocultos en la máquina. Si el paquete ha sufrido un manejo de poco cuidado, golpes o daños (visible o oculto) por favor anote en la factura antes de aceptar la entrega y contacte Omcan dentro de las 24 horas, de modo que podamos iniciar una reclamación con la compañia. Un informe detallado sobre los daños causados a la máquina debe ser llenado en el plazo de tres días, desde la fecha de entrega que se muestra en los documentos de envío. Omcan no tiene ningun recurso por productos dañados que se enviaron a recoger por terceros.

Antes de utilizar cualquier equipo, siempre lea y familiarizarse con todas las instrucciones de funcionamiento y seguridad.

Omcan le gustaría darle las gracias por la compra de esta máquina. Es de la mayor importancia para salvar estas instrucciones para futuras consultas. Además, guarda la caja original y el embalaje para el envío del equipo si servicio técnico o devolución de la máquina que se requiere.

Safety and Warranty

HANDLING AND INSTALLATION

Handle with care Unplug from the wall socket before moving. Never tilt the refrigerator over 45 degrees during handling.	**Storage** Always store the refrigerator in a dry place.

Safety and Warranty

Sufficient space To allow for proper air circulation and increased refrigeration capabilities, the refrigerator must have at least 4”/10cm of space between wall/ceiling and the machine.	**Proper ventilation** Always place the refrigerator in an area with good ventilation. For first time use, set in location and wait at least 2 hours before plugging into wall socket.
Away from heat source Never place the refrigerator near any type of heat source or in direct sunlight, as it reduces refrigeration capabilities.	**No heavy load** Never put heavy items on top of the refrigerator.
No altercations/tampering Never tamper with or make changes to the refrigerator. Changes and add-ons should not be installed to the inside or outside of the refrigerator.	**Stable location** Unpack and place the refrigerator on flat, solid ground.

PREPARATION AND POWER SUPPLY

Exclusive power outlet Power supply should be 220V, single phase AC with exclusive single phase three pin outlet (250V/10A) and fuse (6A). The power outlet must be in close proximity to the ground.	**No shared power outlets** Refrigerator cable should never share the power outlet with any other appliance, as cable will overheat and may result in a fire.
Protect cables Extra caution should be used when handling cables, as broken or damaged cables can cause sparking and may result in a fire.	**No water flushing** Never flush the refrigerator surface. This can cause leakage, which may result in electrical damage or fire.
Never store flammables and explosives No explosives or flammables should be stored in, or in proximity to, the refrigerator, such as gasoline, alcohol, and adhesives.	**No spray** Never spray flammables such as paint or coating near the refrigerator. This may cause fire or malfunction.
After power outage After a power outage or the unplugging of the refrigerator, wait at least 5 minutes before plugging it back in.	**No medicine** Medicine should not be stored inside of the refrigerator.

SUITABLE FOR HIGH TRAFFIC AREAS WHERE NOISE LEVELS ARE NOT A CONCERN.

OMCAN IS NOT RESPONSIBLE FOR DIMINISHED COOLING OR ANY DAMAGES DUE TO WATER LEAKS. WARRANTY FOR WATER LEAKS IS VOID IF THE AMBIENT ROOM TEMPERATURE EXCEEDS 75°F AND 55% RELATIVE HUMIDITY, AND THE APPLIANCE DRAIN IS NOT CONNECTED DIRECTLY TO A FLOOR DRAIN.

RESIDENTIAL USERS: vendor assumes no liability for parts or labor coverage for component failure or other damages resulting from installation in non-commercial or residential applications. The right is reserved to deny shipment for residential usage; if this occurs, you will be notified as soon as possible.

Safety and Warranty

1 YEAR PARTS AND LABOUR WARRANTY

Within the warranty period, contact Omcan Inc. at 1-800-465-0234 to schedule an Omcan authorized service technician to repair the equipment locally.

Unauthorized maintenance will void the warranty. Warranty covers electrical and part failures not improper use.

Please see https://omcan.com/disclaimer for complete info.

WARNING:

The packaging components are classified as normal solid urban waste and can therefore be disposed of without difficulty.

In any case, for suitable recycling, we suggest disposing of the products separately (differentiated waste) according to the current norms.

DO NOT DISCARD ANY PACKAGING MATERIALS IN THE ENVIRONMENT!

Technical Specifications

STEEL UNITS

Model	RS-CN-0440	RS-CN-0530	RS-CN-0700	RS-CN-1050
Item Number	48479	43459	41469	43460
Rated Input Power	1700 W		2550 W	2400 W
Capacity	440 L / 15.53 cu.ft.	530 L / 18.71 cu.ft.	700 L / 24.72 cu.ft.	1050 L/ 37.08 cu.ft.
Electrical	110-120V / 60Hz / 1		220V / 60Hz / 1	
Shelf Load Capacity	55.1 lbs. / 25 kgs.		66.1 lbs. / 30 kgs.	110.2 lbs. / 50 kgs.
Temperature Range	2 - 10°C / 35.6 - 50°F			
Max Ambient Temp Rating	24°C / 75°F			
Refrigerant & Injection	R290			
Type of Climate	3			
Rated Current	16A		12.1A	11.5A
Weight	276.7 lbs. / 125.5 kgs.	335.1 lbs. / 152 kgs.	426.6 lbs. / 193.5 kgs.	565.5 lbs. / 256.5 kgs.
Packaging Weight	332.9 lbs. / 151 kgs.	388 lbs. / 176 kgs.	486.1 lbs. / 220.5 kgs.	652.6 lbs. / 296 kgs.
Dimensions	30” x 30.1” x 81.5” 762 x 765 x 2070mm	36” x 30.1” x 81.5” 915 x 765 x 2070mm	48” x 30.1” x 81.5” 1220 x 765 x 2070mm	72” x 30.1” x 81.5” 1829 x 765 x 2070mm
Packaging Dimensions	33.9” x 33.5” x 87.8” 862 x 850 x 2230mm	40” x 33.5” x 87.8” 1015 x 850 x 2230mm	52” x 33.5” x 87.8” 1320 x 850 x 2230mm	76” x 33.5” x 87.8” 1930 x 850 x 2230mm

BLACK UNITS

Model	RS-CN-0440-B	RS-CN-0530-B	RS-CN-0700-B	RS-CN-1050-B
Item Number	48480	48265	48266	48269
Rated Input Power	1700 W		2550 W	2400 W
Capacity	440 L / 15.53 cu.ft.	530 L / 18.71 cu.ft.	700 L / 24.72 cu.ft.	1050 L/ 37.08 cu.ft.
Electrical	110-120V / 60Hz / 1		220V / 60Hz / 1	
Shelf Load Capacity	55.1 lbs. / 25 kgs.		66.1 lbs. / 30 kgs.	110.2 lbs. / 50 kgs.
Temperature Range	2 - 10°C / 35.6 - 50°F			
Max Ambient Temp Rating	24°C / 75°F			
Refrigerant & Injection	R290			
Type of Climate	3			
Rated Current	16A		12.1A	11.5A
Weight	276.7 lbs. / 125.5 kgs.	335.1 lbs. / 152 kgs.	426.6 lbs. / 193.5 kgs.	565.5 lbs. / 256.5 kgs.
Packaging Weight	332.9 lbs. / 151 kgs.	388 lbs. / 176 kgs.	486.1 lbs. / 220.5 kgs.	652.6 lbs. / 296 kgs.
Dimensions	30” x 30.1” x 81.5” 762 x 765 x 2070mm	36” x 30.1” x 81.5” 915 x 765 x 2070mm	48” x 30.1” x 81.5” 1220 x 765 x 2070mm	72” x 30.1” x 81.5” 1829 x 765 x 2070mm
Packaging Dimensions	33.9” x 33.5” x 87.8” 862 x 850 x 2230mm	40” x 33.5” x 87.8” 1015 x 850 x 2230mm	52” x 33.5” x 87.8” 1320 x 850 x 2230mm	76” x 33.5” x 87.8” 1930 x 850 x 2230mm

Operation

BEFORE USE

- Plug refrigerator into the exclusive socket.
- After the refrigerator is running, confirm that air suction/filtration is in working order and that it is sufficiently cold. After checking to make sure the refrigerator is working properly, it may be used.

DIGITAL TEMPERATURE CONTROLLER

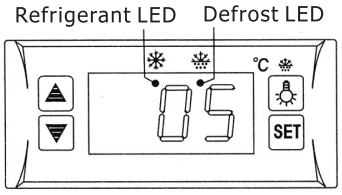

FEATURES OF FUNCTION

- Small, integrated digital controller, which is applicable to the compressor of 1 HP. Located behind the front grill.
- Main functions are: temperature display, temperature control, manual-automatic, light control, value storing, self-testing, parameter locking.

FRONT PANEL OPERATION

1. Set temperature: press SET button; set temperature will be displayed. Press ▲ or ▼ button to modify and store the displayed value. Press SET button to exit the adjustment and display the cold-room temperature.
2. If no button is pressed within 10 seconds, the cold-room temperature will be displayed.
3. Lighting: press button to activate light in refrigerator; press again to turn off. Manual start/stop defrost: press button and hold for 6 seconds to either defrost or to stop defrost.
4. Refrigeration LED: during refrigeration, the LED is on. When the cold room temperature is constant, the LED is off. During delay start, the LED flashes.
5. Defrost LED: during defrosting, the LED is on. When it stops defrosting, the LED is off. During the delay of defrost, the LED flashed.

CAUTION

- Never block the air outlet and suction to keep the air circulation and refrigeration capability constant.
- Do not overfill refrigerator with food, as it will influence the cooling effect. If needed, adjust the rack height for proper food storage.
- Cool down hot food to room temperature before placing inside the refrigerator.
- When power supply has been cut off, reduce opening times and maintain cool temperature in refrigerator.
- To avoid scalding, never touch the compressor.
- If the supply cord is damaged, it must be replaced by the manufacturer, its service agent, or similarly qualified persons in order to avoid hazard.

Operation

- This appliance is not intended for use by persons (including children) with reduced physical, sensory or mental capabilities, or lack of experience and knowledge, unless they have been given supervision or instruction concerning use of the appliance by a person responsible for their safety.
- Children should be supervised to ensure that they do not play with the appliance.

Maintenance

1. Cabinet Cleaning:
   a. The product should be maintained and cleaned periodically with power supply disconnected. In cleaning, please use mild-rinsing water or non-corrosive products. Do not wash directly with water faucet.
   b. Clean outside of unit using a soft cloth with neutral detergent, and dry with a separate soft cloth.
   c. Clean inside racks by removing them from the unit and clean with water.
2. When shutting down unit for a long period of time, take out all food and unplug wall socket. Clean inside and outside thoroughly, and keep door open to sufficiently dry.
3. As glass breaks easily, keep far away from children.
4. Frequently observe the operation of the product. In case of any abnormal noise or smell, cut off the power supply immediately and call professionals. Do not restart the product before source of trouble is found.
5. We will not be responsible for any accidents acquired through failure to follow previous notices.

SERVICE

- To maintain good refrigeration performance, a refrigeration service person should be called periodically (at least twice a year) to clean the discharge honeycomb and remove any accumulated dirt from the condenser coil and condensate evaporator pan on self-contained models. POOR CIRCULATION OF AIR THROUGH THE CONDENSER COIL WILL RESULT IN POOR REFRIGERATION PERFORMANCE.
- Dirt accumulation inside the condensate evaporator pan will reduce the pan's capacity and affect the efficiency of the heater causing a burned out heater and an overflow of defrost water onto the store floor.

Troubleshooting

Trouble	Causes	Solutions
Strange noise under the bottom shelf.	Fan blade broken.	Power off and fix the blade.
Non-refrigerating in spite of normal operation.	Unit off.	Power on.
	Melting process.	Stop melting.
	Refrigerant leaking.	Patch the leak and refill refrigerant.
	Unit failure.	Call Omcan.

Troubleshooting

Trouble	Causes	Solutions
Weak air from air curtain, and higher cabinet temperature.	Evaporator blocked by frost.	Increase melting frequency.
	Inside fan damaged.	Replace the fan.
	Too low point of temperature controller.	Adjust the set point.
	Vent blocked by storage.	Remove the storage.
Normal air curtain, but higher cabinet temperature.	Insufficient refrigerant.	Refill the refrigerant.
	Too high set point of temperature controllers.	Adjust the set point for the temperature controller.
	The wind curtain disturbed by strong air flow.	Removing the disturbing factors.
	Ambient temperature or humidity beyond standards.	Improve the conditions.
Melting water overflows.	Heating pipe for melting water damaged.	Replace the heating pipe.
	Water level controller failure.	Replace the water level controller.
	Ambient temperature or humidity beyond standards.	Improve the conditions.
Normal air curtain, but periodical fluctuation of cabinet temperature.	Condenser contaminated.	Clean the condenser.
	Poor venting of the unit.	Improve the venting conditions.
	Heat protection of compressor failure.	Replace the heat protection.
	Capillary is blocked by ice.	Replace the drying filter.
	Temperature controller failure.	Replace the temperature controller.
Water leaks on floor.	Ambient room temperature exceeds 75°F and 55% relative humidity.	Connect appliance drain to floor drain.

NOTE

Following occurrences are not problems:

- The murmur of water is heard when the refrigerator is working. It is a normal occurrence as the coolant is circulating in the system.
- When the weather is damp, condensation might be found on the outside of the refrigerator. It is caused by high humidity. Simply use cloth to wipe it off.

Parts Breakdown

Model RS-CN-0440 48479

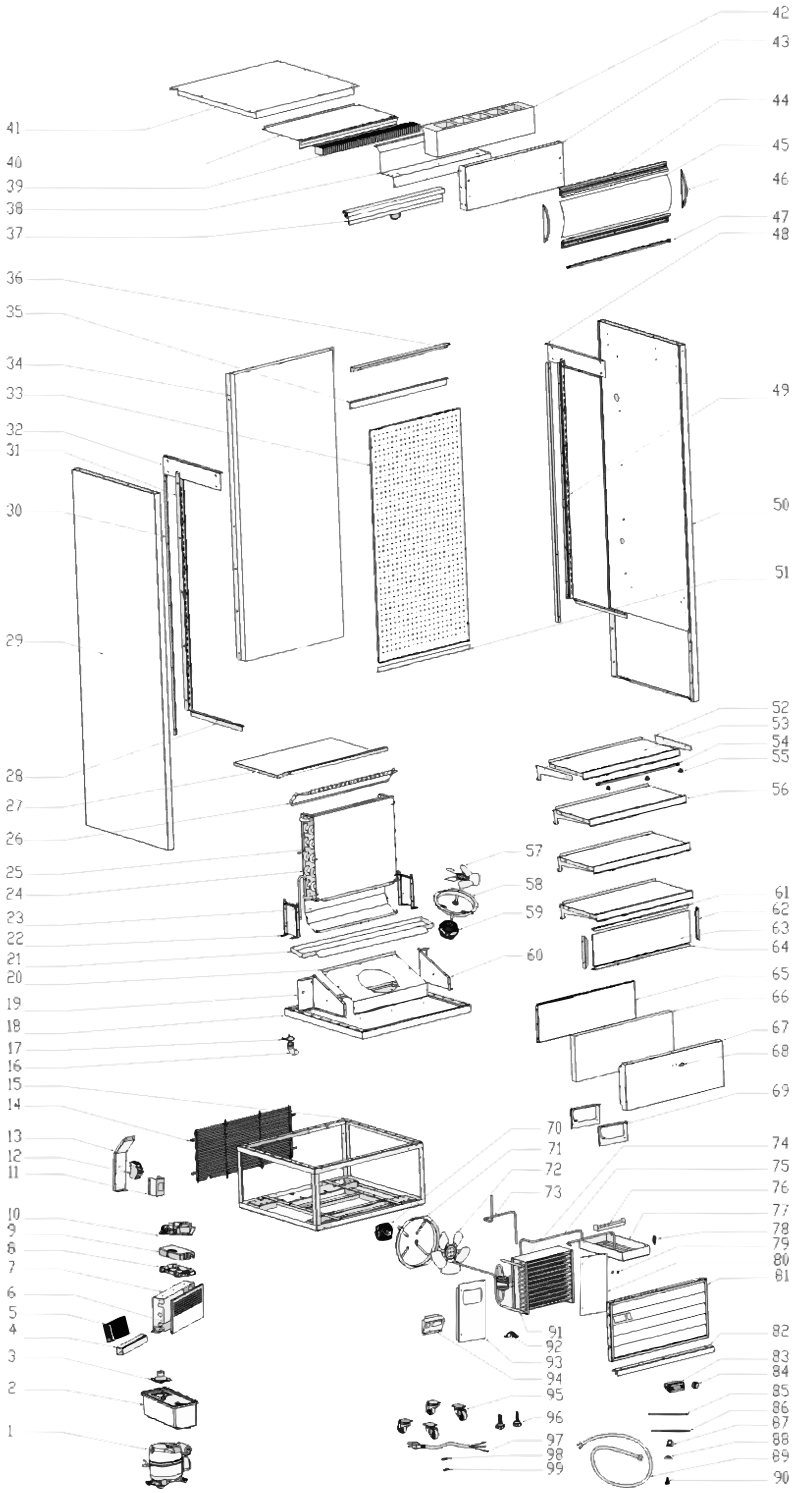

Parts Breakdown

Model RS-CN-0440 48479

Item No.	Description	Position
AP390	Compressor for 48479	1
60587	Water Receiver for 48479	2
79304	Pipe for Evaporated Water for 48479	3
60590	PVC Trucking for 48479	4
AT357	Switch Power Supply for 48479	5
AT358	Cover of Terminal Box for 48479	6
AO860	Wiring Box for 48479	7
61167	Circuit Board Box for 48479	8
60594	Cover of Circuit Board Box for 48479	9
AF546	Main Circuit Board for 48479	10
AT359	Leakage Circuit Breaker Cover for 48479	11
AT360	Leakage Circuit Breaker for 48479	12
AT361	Leakage Circuit Breaker Fixing Plate for 48479	13
AT362	Mesh Guard in Base for 48479	14
AT363	Base for 48479	15
AO889	Water Pipe for 48479	16
AL376	Circlip for 48479	17
AT364	Foam of Base Plate for 48479	18
60602	Left Board of Evaporator Cover for 48479	19
AT365	Evaporator Motor Cover for 48479	20
AT366	Evaporator Water Box for 48479	21
60604	Evaporator Holder for 48479	22
AT367	Evaporator Ventilation Damper for 48479	23
AT368	Evaporator for 48479	24
AT369	Evaporator Damper for 48479	25
AT370	Evaporator Windshield for 48479	26
AT371	Air Inlet Panel for 48479	27
60610	Parry of Lower Air Intake for 48479	28
AO866	Foam of Left Side Board for 48479	29
60613	Dead Plate of Rear Foam for 48479	30
AT372	Left Support Pillar of Shelf for 48479	31
60615	Parry of Right Lining Plate for 48479	32
AT373	Ventilated Board for 48479	33
AT374	Upper Back Plate for 48479	34
AT375	Damper of Back Foam for 48479	35
AT376	Back Upper Crosspiece for 48479	36
AT377	Night Curtain for 48479	37
AT378	Damper of Upper Air Outlet for 48479	38
68470	Honeycomb Plate for 48479	39
AT379	Cover of Upper Air Outlet for 48479	40
AT380	Upper Cover Plate for 48479	41
60698	Lining Foam for 48479	42
AT381	Upper Front Board for 48479	43
AT382	Lampshade Frame for 48479	44
AT383	Lampshade for 48479	45
60628	Holder of Lampshade Frame for 48479	46
AT384	Constant Voltage Patch LED Light 1 for 48479	47
60629	Parry of Right Lining Plate for 48479	48
AT385	Right Support Pillar of Shelf for 48479	49
AO878	Foam of Right Board for 48479	50
AT386	Rear Support of Air Inlet Panel for 48479	51
AO905	Left/Right Support Pillar of Shelf for 48479	52
AT387	General Assembly for Shelf for 48479	53
AT388	Constant Voltage Patch LED Light 2 for 48479	54
AD500	Jump Ring of LED for 48479	55
AT389	Price Tag Holder for 48479	56
79366	Fan Blade for 48479	57
60641	Fan Guard for 48479	58
AL374	Evaporator Fan Motor for 48479	59
60643	Left Plate of Evaporator Motor for 48479	60
AT390	Decorating Strip of Glass Deflector for 48479	61
60645	Strip of Glass Deflector for 48479	62
AT391	Glass Deflector for 48479	63
AT392	Strip of Glass Deflector for 48479	64
AT393	Lower Front Board Component for 48479	65
AT394	PE Cotton for Lower Front Board for 48479	66
AT395	Lower Front Board for 48479	67
60651	Curtain Hook for 48479	68
68392	Water Box Bracket for 48479	69
AD518	Condenser Fan Motor for 48479	70
79365	Fan Guard for 48479	71
60640	Fan Blade for 48479	72
AT396	Connection Pipe for 48479	73
70106	Dry Filter for 48479	74
AT397	High Pressure Evaporation Tube for 48479	75
60652	High Pressure Evaporation Tube Pressure Plate for 48479	76
60655	Water Box for 48479	77
AL306	Pagoda Water Mouth-Processing for 48479	78
68301	Strong Magnet for 48479	79
AT398	Right Windshield of Condenser for 48479	80
AT399	Shutter for 48479	81
AT400	Lower Front Crosspiece for 48479	82
67648	Temperature Display for 48479	83
AR485	Switch (Higher Amp) for 48479	84

Parts Breakdown

Model RS-CN-0440 48479

Item No.	Description	Position
60666	Temperature Probe for 48479	85
AD481	Overheating Probe for 48479	86
60670	PPR Tube Strap for 48479	87
60669	Pressing Plate of Dry Filter for 48479	88
60668	Drain Pipe for 48479	89

Item No.	Description	Position
68398	Copper Connection for 48479	90
AT401	Condenser for 48479	91
AO865	Filter Pressure Plate for 48479	92
AT402	Left Windshield of Condenser for 48479	93
60663	Switch Display Bracket for 48479	94

Item No.	Description	Position
AL357	Castor without Brake for 48479	95
60672	Feet for 48479	96
AC057	Power Cord for 48479	97
66095	Wire Clip Cover for 48479	98
61246	Wire Clip Holder for 48479	99

Parts Breakdown

Model RS-CN-0530 43459

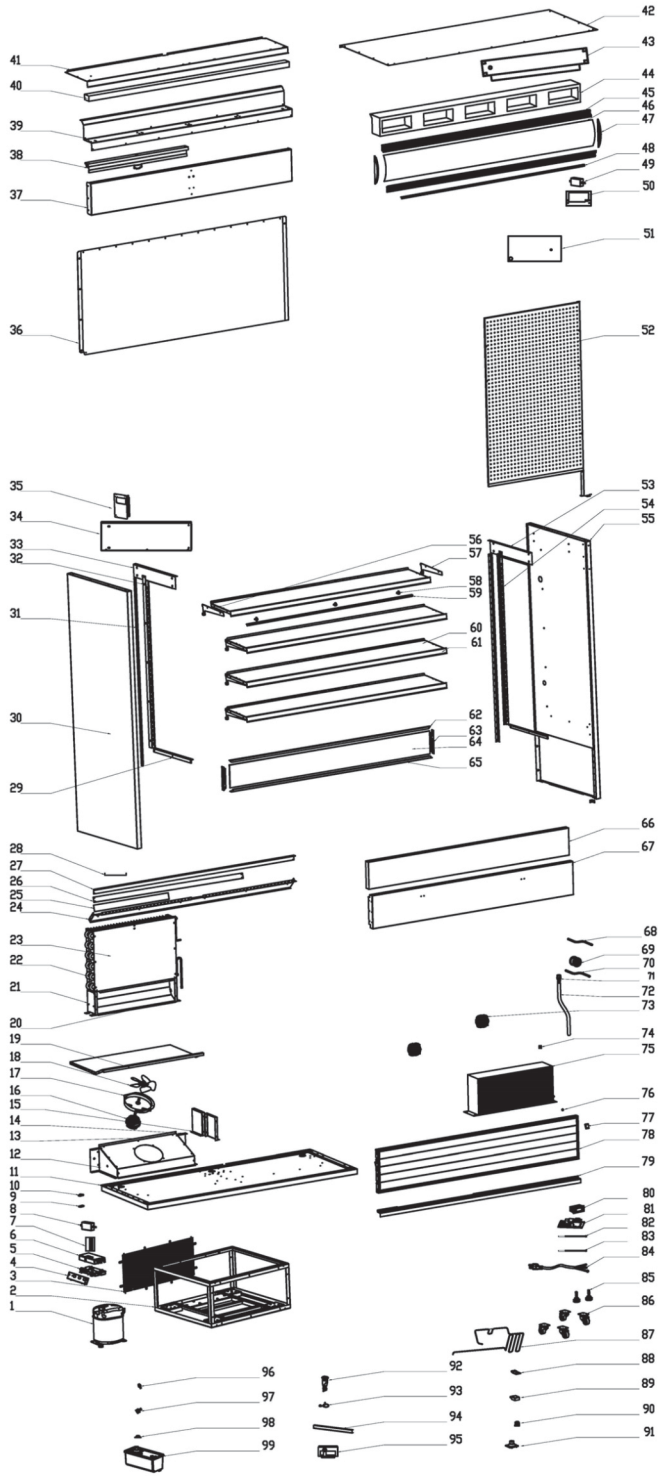

Parts Breakdown

Model RS-CN-0530 43459

Item No.	Description	Position
AP390	Compressor for 43459	1
AP391	Base for 43459	2
60599	Mesh Guard in Base for 43459	3
AO860	Wiring Box for 43459	4
61167	Circuit Board Box for 43459	5
60594	Cover of Circuit Board Box for 43459	6
AO861	Cap of Juncting Box for 43459	7
AO862	LED Transformer for 43459	8, 49
61246	Wire Clip Holder for 43459	9
66095	Wire Clip Cover for 43459	10
60601	Foam of Base Plate for 43459	11
60602	Left Board of Evaporator Cover for 43459	12
60603	Evaporator Cover for 43459	13
60643	Right Plate of Evaporator Motor for 43459	14
60632	Middle Support Pillar of Air Intake for 43459	15
AL374	Evaporator Fan Motor for 43459	16
60641	Fan Guard for 43459	17
60640	Fan Blade for 43459	18
AO863	Plate of Left/Right Air Intake for 43459	19
60605	Evaporator Ventilation Damper for 43459	20
60604	Evaporator Holder for 43459	21
AO864	Evaporator for 43459	22
60607	Evaporator Damper for 43459	23
60608	Evaporator Wind Screen for 43459	24
60648	Lower Front Baffle Assembly for 43459	25
60617	Rear Foam Baffle for 43459	26
66096	Back Upper Crosspiece for 43459	27
AO865	Filter Pressure Plate for 43459	28
60610	Parry of Lower Air Intake for 43459	29
AO866	Foam of Left Side Board for 43459	30
60613	Dead Plate of Rear Foam for 43459	31
AO867	Left Support Pillar of Shelf for 43459	32
60615	Parry of Right Lining Plate for 43459	33
AP392	Condensator Right Windshield for 43459	34
AP393	Left Windshield of Condenser for 43459	35
AO869	Upper Back Plate for 43459	36
AO870	Upper Front Board for 43459	37
66097	Night Curtain for 43459	38
AP394	Damper of Upper Air Outlet for 43459	39
66099	Honeycomb Panel for 43459	40
AO872	Cover of Upper Air Outlet for 43459	41
AO873	Upper Cover Plate for 43459	42
67647	The Left of the Evaporator Water Box for 43459	43
60698	Lining Foam for 43459	44
60626	Lampshade Frame for 43459	45
60627	Lampshade for 43459	46
60628	Holder of Lampshade Frame for 43459	47
AO874	Constant Voltage Patch LED Light for 43459	48
68392	Water Box Bracket for 43459	50
60655	Water Box for 43459	51
AO876	Ventilated Board for 43459	52
60629	Parry of Right Lining Plate for 43459	53
AO877	Right Support Pillar of Shelf for 43459	54
AO878	Foam of Right Board for 43459	55
AP395	Left Support Pillar of Shelf for 43459	56
AP396	Right Support Pillar of Shelf for 43459	57
AD500	Jump Ring of LED for 43459	58
AO881	Constant Voltage Patch LED Light for 43459	59
AO882	General Assembly for Shelves for 43459	60
60639	Price Tag Holder for 43459	61
60644	Decorating Strip of Glass Deflector for 43459	62
60647	Strip of Glass Deflector 2 for 43459	63
67644	Glass Deflector for 43459	64
60645	Strip of Glass Deflector for 43459	65
60649	PE for Lower Board for 43459	66
AP397	Lower Front Board for 43459	67
AP398	Capillary Filter Connection Tube for 43459	68
70106	Dry Filter for 43459	69
AP399	Joint Pipe of Dry Filter for 43459	70
AL576	Drain Joint for 43459	71
60668	Drain Pipe for 43459	72
AD518	Condenser Fan Motor for 43459	73
60633	Side Panel Connector for 43459	74
AP401	Condenser for 43459	75
68301	Strong Magnet for 43459	76
AR485	Switch (Higher Amp) for 43459	77
AP402	Switch Cover for 43459	78
60660	Lower Front Waling for 43459	79
AI123	Main Board for 43459	80
67648	Temperature Display for 43459	80
60666	Temperature Probe for 43459	81
AO887	Defrost Probe for 43459	82
AC057	Power Cord for 43459	83
60672	Feet for 43459	84
AL357	Castor without Brake for 43459	85
60653	High Pressure Evaporation Tube for 43459	86
79359	Cover of Junction Box for 43459	87

Parts Breakdown

Model RS-CN-0530 43459

Item No.	Description	Position
61244	Terminal Box for 43459	88
60590	PVC Trucking for 43459	89
60670	PPR Tube Strap for 43459	90
79304	Pipe for Evaporated Water for 43459	91

Item No.	Description	Position
AO889	Water Pipe for 43459	92
AL376	Circlip for 43459	93
60652	High Pressure Evaporation Tube Pressure Plate for 43459	94
AP403	Switch Display Bracket for 43459	95

Item No.	Description	Position
AL306	Pagoda Water Mouth-Processing for 43459	96
68398	Copper Connection for 43459	97
60669	Pressing Plate of Dry Filter for 43459	98
60587	Water Receiver for 43459	99

Parts Breakdown

Model RS-CN-0700 41469

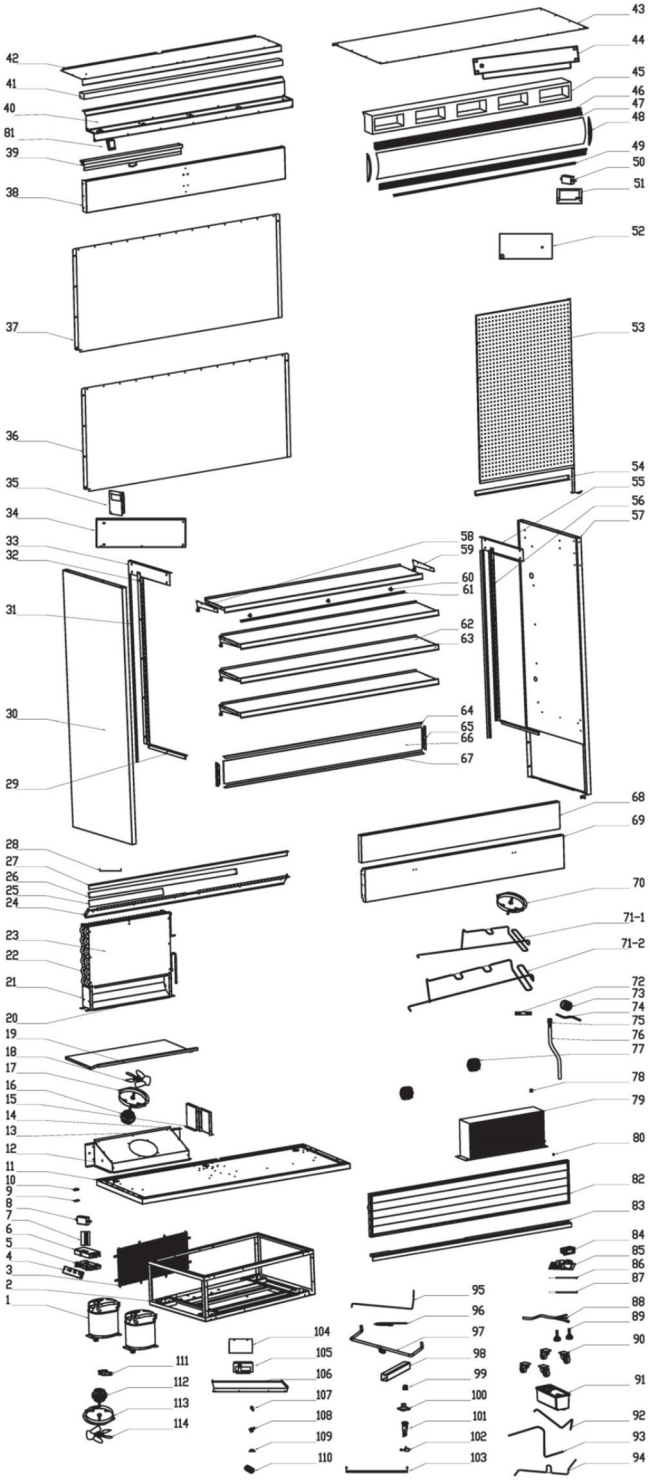

Parts Breakdown

Model RS-CN-0700 41469

Item No.	Description	Position
AP414	Compressor (R290) for 41469	1
AP415	Base for 41469	2
70133	Mesh Guard in Base for 41469	3
AO860	Wiring Box for 41469	4
61167	Circuit Board Box for 41469	5
60594	Cover of Circuit Board Box for 41469	6
AO861	Cap of Juncting Box for 41469	7
AO862	LED Transformer for 41469	8, 50
60676	Wire Clip Holder for 41469	9
60677	Wire Clip Cover for 41469	10
67653	Foam of Base Plate for 41469	11
60680	Left Board of Evaporator Cover for 41469	12
70154	Evaporator Cover for 41469	13
60681	Left Plate of Evaporator Motor for 41469	14
60684	Middle Support Pillar of Air Intake for 41469	15
AO892	Evaporator Fan Motor for 41469	16, 77
60641	Fan Guard for 41469	17, 70
60640	Fan Blade for 41469	18
AO893	Plate of Left/Right Air Intake for 41469	19
67654	Evaporator Ventilation Damper for 41469	20
60604	Evaporator Holder for 41469	21
AP416	Evaporator for 41469	22
67655	Evaporator Damper for 41469	23
67656	Evaporator Wind Screen for 41469	24
70153	Lower Front Baffle Assembly for 41469	25
70120	Rear Foam Baffle for 41469	26
70143	Back Upper Crosspiece for 41469	27
AO865	Filter Pressure Plate for 41469	28
60610	Parry of Lower Air Intake for 41469	29
AO866	Foam of Left Side Board for 41469	30
60613	Dead Plate of Rear Foam for 41469	31
AO867	Left Support Pillar of Shelf for 41469	32
60615	Parry of Right Lining Plate for 41469	33
AP417	Condensator Right Windshield for 41469	34
AP418	Left Windshield of Condenser for 41469	35
AO896	Lower Back Plate for 41469	36
AO897	Upper Back Plate for 41469	37
AO898	Upper Front Board for 41469	38
66104	Night Curtain for 41469	39
AO899	Damper of Upper Air Outlet for 41469	40
67660	Honeycomb Panel for 41469	41
AO900	Cover of Upper Air Outlet for 41469	42
AP419	Upper Cover Plate for 41469	43
AO902	The Left of the Evaporator Water Box for 41469	44
60698	Lining Foam for 41469	45
70141	Lampshade Frame for 41469	46
70142	Lampshade for 41469	47
60628	Holder of Lampshade Frame for 41469	48
AO903	Constant Voltage Patch LED Advertising Board Light for 41469	49
68392	Water Box Bracket for 41469	51
60655	Water Box for 41469	52
AO904	Ventilated Board for 41469	53
67662	Back Support for Board at Air Intake for 41469	54
60629	Parry of Right Lining Plate for 41469	55
AO877	Right Support Pillar of Shelf for 41469	56
AO878	Foam of Right Board for 41469	57
AO905	Left/Right Support Pillar of Shelf for 41469	58, 59
AD500	Jump Ring of LED for 41469	60
AO906	Constant Voltage Patch LED Light for 41469	61
AO907	General Assembly for Shelves for 41469	62
67665	Price Tag Holder for 41469	63
70151	Decorating Strip of Glass Deflector for 41469	64
70149	Strip of Glass Deflector 2 for 41469	65
67666	Glass Deflector for 41469	66
60645	Strip of Glass Deflector for 41469	67
67667	PE for Lower Board for 41469	68
AO908	Lower Front Board for 41469	69
AP420	Right High Voltage Evaporating Pipe for 41469	71–1
AP421	Left High Voltage Evaporating Pipe for 41469	71–2
AO890	Drainage Pipe Bracket for 41469	72
70106	Dry Filter for 41469	73
AP422	Joint Pipe of Dry Filter for 41469	74
AL576	Drain Joint for 41469	75
60668	Drain Pipe for 41469	76
60633	Side Plate Connector for 41469	78
AP423	Condenser for 41469	79
68301	Strong Magnet for 41469	80
AR485	Switch (Higher Amp) for 41469	81
AO910	Switch Cover for 41469	82
70127	Lower Front Waling for 41469	83
67648	Temperature Display for 41469	84
AP424	Main Circuit Board used on a Dual compressor (Please provide SN# if used on a single compressor)	85
60666	Temperature Probe for 41469	86
AO887	Defrost Probe for 41469	87
AO911	Power Cord for 41469	88
60672	Feet for 41469	89
AL357	Castor without Brake for 41469	90

Parts Breakdown

Model RS-CN-0700 41469

Item No.	Description	Position
67651	Water Connection Box Component for 41469	91
AP425	Connecting Tube for Right Condenser and Dry Filter for 41469	92
AP426	Connecting Tube for Left Condenser and Dry Filter for 41469	93
AP427	Right Air Return Duct for 41469	94
AP428	Left Air Return Duct for 41469	95
AP429	Tee Joint for 41469	96
AO888	PVC Tube for 41469	97
60590	PVC Trucking for 41469	98

Item No.	Description	Position
60670	PPR Tube Strap for 41469	99
79304	Pipe for Evaporated Water for 41469	100
AO889	Water Pipe for 41469	101
AL376	Circlip for 41469	102
60652	High Pressure Evaporation Tube Pressure Plate for 41469	103
AP430	Baffle Board of Evaporator Motor for 41469	104
AP403	Switch Display Bracket for 41469	105
AP431	Top Baffle Board of Condenser for 41469	106

Item No.	Description	Position
AL306	Pagoda Water Mouth-Processing for 41469	107
68398	Copper Connection for 41469	108
60669	Pressing Plate of Dry Filter for 41469	109
AP432	WAGO Wire Connector for 41469	110
AP433	American Plug for 41469	111
70111	Fan Motor for 41469	112
60932	Fan Guard for 41469	113
60933	Fan Blade for 41469	114

Parts Breakdown

Model RS-CN-1050 43460

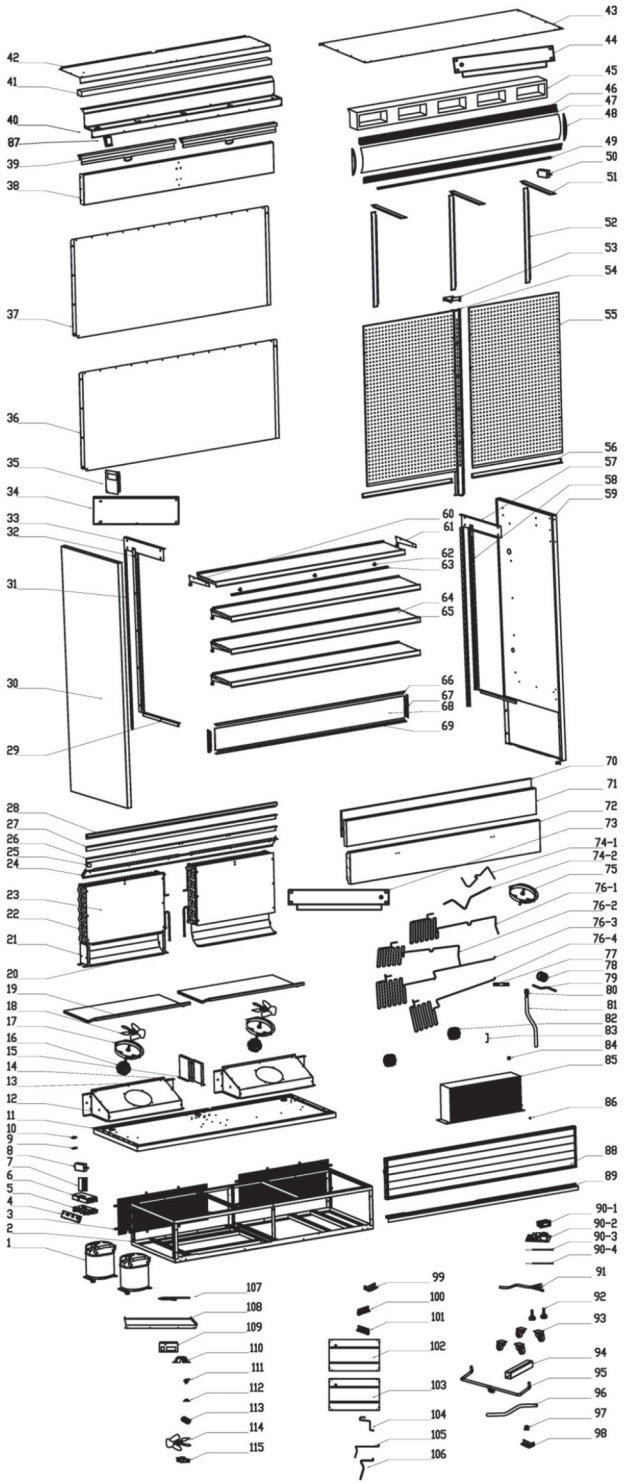

Parts Breakdown

Model RS-CN-1050 43460

Item No.	Description	Position
AP414	Compressor (R290) for 43460	1
AP434	Base for 43460	2
60599	Mesh Guard in Base for 43460	3
AO860	Wiring Box for 43460	4
61167	Circuit Board Box for 43460	5
60594	Cover of Circuit Board Box for 43460	6
AO861	Cap of Juncting Box for 43460	7
AO862	LED Transformer for 43460	8, 50
60676	Wire Clip Holder for 43460	9
60677	Wire Clip Cover for 43460	10
60679	Foam of Base Plate for 43460	11
60680	Left Board of Evaporator Cover for 43460	12
60603	Evaporator Cover for 43460	13
60681	Left Plate of Evaporator Motor for 43460	14
60684	Middle Support Pillar of Air Intake for 43460	15
AO892	Evaporator Fan Motor for 43460	16
60932	Fan Guard for 43460	17
60640	Fan Blade for 43460	18
AO875	Plate of Left/Right Air Intake for 43460	19
60605	Evaporator Ventilation Damper for 43460	20
60604	Evaporator Holder for 43460	21
AO864	Evaporator for 43460	22
60607	Evaporator Damper for 43460	23
60683	Evaporator Wind Screen for 43460	24
AO912	Shock-Absorbing Parts for 43460	25
67676	Crosspiece of Back Foam for 43460	26
66105	Back Upper Crosspiece for 43460	27
67677	Thicker Crosspiece of Back Ventilated Board for 43460	28
60610	Parry of Lower Air Intake for 43460	29
AO866	Foam of Left Side Board for 43460	30
60613	Dead Plate of Rear Foam for 43460	31
AO867	Left Support Pillar of Shelf for 43460	32
60615	Parry of Right Lining Plate for 43460	33
AP435	Right Windshield of Condenser for 43460	34
AP436	Left Windshield of Condenser for 43460	35
AO914	Lower Back Plate for 43460	36
AO915	Upper Back Plate for 43460	37
AO916	Upper Front Board for 43460	38
60692	Night Curtain for 43460	39
AO917	Damper of Upper Air Outlet for 43460	40
60694	Honeycomb Panel for 43460	41
AO918	Cover of Upper Air Outlet for 43460	42
AO919	Upper Cover Plate for 43460	43
AO920	The Left of the Evaporator Water Box for 43460	44
60698	Lining Foam for 43460	45
60700	Lampshade Frame for 43460	46
60701	Lampshade for 43460	47
60628	Holder of Lampshade Frame for 43460	48
AO921	LED in Light Box for 43460	49
60696	Vertical Plate of Upper Foam for 43460	51
67684	Vertical Plate of Back Foam for 43460	52
60686	Holding Plate of Back Foam Crosspiece for 43460	53
AO922	Middle Support Pillar of Shelf for 43460	54
AO923	Ventilated Board for 43460	55
60703	Back Support for Board at Air Intake for 43460	56
60629	Parry of Right Lining Plate for 43460	57
AO877	Right Support Pillar of Shelf for 43460	58
AO878	Foam of Right Board for 43460	59
AO905	Left/Right Support Pillar of Shelf for 43460	60, 61
AP437	Jump Ring of LED for 43460	62
AO924	LED for 43460	63
AP438	General Assembly for Shelves for 43460	64
60709	Price Tag Holder for 43460	65
60712	Decorating Strip of Glass Deflector for 43460	66
60710	Strip of Glass Deflector 2 for 43460	67
67686	Glass Deflector for 43460	68
60645	Strip of Glass Deflector for 43460	69
60713	Lower Front Board Components for 43460	70
60714	PE for Lower Board for 43460	71
AO926	Lower Front Board for 43460	72
AO927	The Right Side of the Evaporator Water Box for 43460	73
AP439	Right Joint Pipe of Compressor for 43460	74--1
AP440	Left Joint Pipe of Compressor for 43460	74--2
60641	Fan Guard for 43460	75
AP441	Right Bottom High Pressure Evaporating Tube for 43460	76--1
AP442	Left Bottom High Pressure Evaporating Tube for 43460	76--2
AP443	Right Top High Pressure Evaporating Tube for 43460	76--3
AP444	Left Top High Pressure Evaporating Tube for 43460	76--4
AO929	The Bracket on the Water Pipe for 43460	77
70106	Dry Filter for 43460	78
AP422	Joint Pipe of Dry Filter for 43460	79

Parts Breakdown

Model RS-CN-1050 43460

Item No.	Description	Position
AO930	Drain Joint for 43460	80
AO931	Drain Pipe for 43460	81
70111	Fan Motor for 43460	82
AO932	Under-Wear Pipe Bracket for 43460	83
60633	Side Panel Connector for 43460	84
AP423	Condenser for 43460	85
68301	Strong Magnet for 43460	86
AR485	Switch (Higher Amp) for 43460	87
AO933	Switch Cover for 43460	88
60721	Lower Front Waling for 43460	89
67648	Temperature Display for 43460	90-1
AP424	Main Circuit Board for 43460	90-2
AO934	Temperature Probe for 43460	90-3

Item No.	Description	Position
AO887	Defrost Probe for 43460	90-4
AC057	Power Cord for 43460	91
60672	Feet for 43460	92
AL357	Castor without Brake for 43460	93
60590	PVC Trucking for 43460	94
AO888	PVC Pipe for 43460	95
60668	Drain Pipe for 43460	96
60670	PPR Tube Strap for 43460	97
AP445	Right Rear Bracket of Evaporating Pan for 43460	98
AP446	Right Front Bracket of Evaporating Pan for 43460	99
AP447	Left Rear Bracket of Evaporating Pan for 43460	100
AP448	Left Front Bracket of Evaporating Pan for 43460	101
AP449	Bottom Evaporating Pan Assembly for 43460	102

Item No.	Description	Position
AP450	Top Evaporating Pan Assembly for 43460	103
AP451	High Pressure Evaporation Connect Tube for 43460	104
AP452	Connecting Tube for Right Condenser and Dry Filter for 43460	105
AP453	Connecting Tube for Left Condenser and Dry Filter for 43460	106
AP429	Tee Joint for 43460	107
AP454	Top Baffle Board of Condenser for 43460	108
AP403	Switch Display Bracket for 43460	109
AO865	Filter Pressure Plate for 43460	110
68398	Copper Connection for 43460	111
60669	Pressing Plate of Dry Filter for 43460	112
AP432	WAGO Wire Connector for 43460	113
60933	Fan Blade for 43460	114
AP433	American Plug for 43460	115

Parts Breakdown

Model RS-CN-0440-B 48480

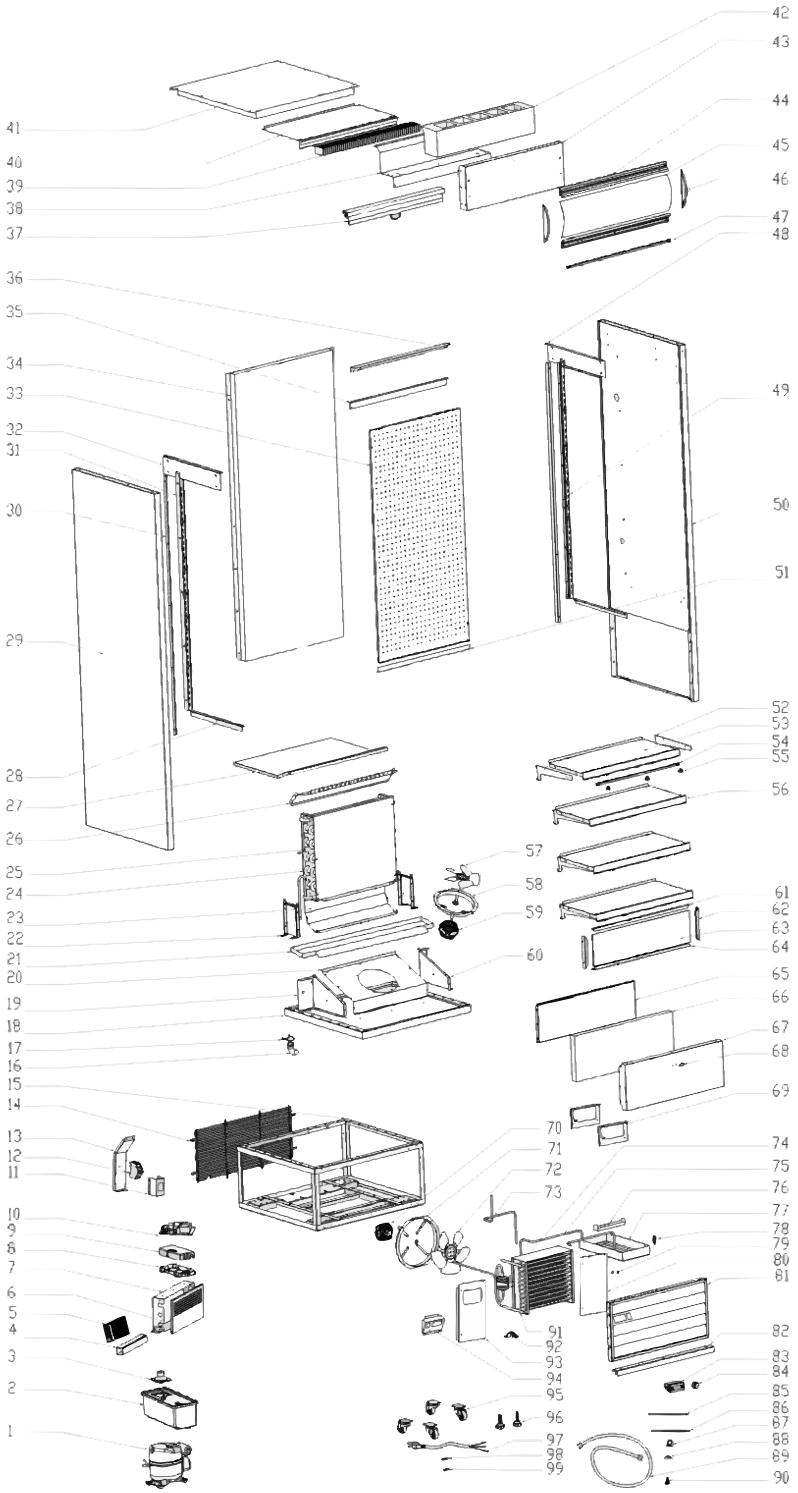

Parts Breakdown

Model RS-CN-0440-B 48480

Item No.	Description	Position
AP390	Compressor for 48480	1
60587	Water Receiver for 48480	2
79304	Pipe for Evaporated Water for 48480	3
60590	PVC Trucking for 48480	4
AT357	Switch Power Supply for 48480	5
AT358	Cover of Terminal Box for 48480	6
AO860	Wiring Box for 48480	7
61167	Circuit Board Box for 48480	8
60594	Cover of Circuit Board Box for 48480	9
AF546	Main Circuit Board for 48480	10
AT359	Leakage Circuit Breaker Cover for 48480	11
AT360	Leakage Circuit Breaker for 48480	12
AT361	Leakage Circuit Breaker Fixing Plate for 48480	13
AT362	Mesh Guard in Base for 48480	14
AT363	Base for 48480	15
AO889	Water Pipe for 48480	16
AL376	Circlip for 48480	17
AT364	Foam of Base Plate for 48480	18
60602	Left Board of Evaporator Cover for 48480	19
AT365	Evaporator Motor Cover for 48480	20
AT366	Evaporator Water Box for 48480	21
60604	Evaporator Holder for 48480	22
AT367	Evaporator Ventilation Damper for 48480	23
AT368	Evaporator for 48480	24
AT369	Evaporator Damper for 48480	25
AT370	Evaporator Windshield for 48480	26
AT403	Air Inlet Panel - Plastic Coated for 48480	27
60610	Parry of Lower Air Intake for 48480	28
AQ661	Left Side Board for 48480	29
60613	Dead Plate of Rear Foam for 48480	30
AQ662	Left Support Pillar of Shelf for 48480	31
60615	Parry of Right Lining Plate for 48480	32
AT404	Ventilated Board - Plastic Coated for 48480	33
AT405	Upper Back Plate for 48480	34
AT375	Damper of Back Foam for 48480	35
AT376	Back Upper Crosspiece for 48480	36
AT377	Night Curtain for 48480	37
AT406	Damper of Upper Air Outlet - Plastic Coated for 48480	38
68470	Honeycomb Plate for 48480	39
AT407	Cover of Upper Air Outlet - Plastic Coated for 48480	40
AT408	Upper Cover Plate for 48480	41
60698	Lining Foam for 48480	42
AT409	Upper Front Board - Plastic Coated for 48480	43
AT382	Lampshade Frame for 48480	44
AT383	Lampshade for 48480	45
60628	Holder of Lampshade Frame for 48480	46
AT384	Constant Voltage Patch LED Light 1 for 48480	47
60629	Parry of Right Lining Plate for 48480	48
AQ669	Right Support Pillar of Shelf for 48480	49
AQ670	Right Side Board for 48480	50
AT386	Rear Support of Air Inlet Panel for 48480	51
AT410	Support Pillar of Shelf - Plastic Coated for 48480	52
AT411	General Assembly for Shelf - Plastic Coated for 48480	53
AT388	Constant Voltage Patch LED Light 2 for 48480	54
AD500	Jump Ring of LED for 48480	55
AT389	Price Tag Holder for 48480	56
79366	Fan Blade for 48480	57
60641	Fan Guard for 48480	58
AL374	Evaporator Fan Motor for 48480	59
60643	Left Plate of Evaporator Motor for 48480	60
AT390	Decorating Strip of Glass Deflector for 48480	61
60645	Strip of Glass Deflector for 48480	62
AT391	Glass Deflector for 48480	63
AT392	Strip of Glass Deflector for 48480	64
AT393	Lower Front Board Component for 48480	65
AT394	PE Cotton for Lower Front Board for 48480	66
AT412	Lower Front Board - Plastic Coated for 48480	67
AT413	Curtain Hook - Plastic Coated for 48480	68
68392	Water Box Bracket for 48480	69
AD518	Condenser Fan Motor for 48480	70
79365	Fan Guard for 48480	71
60640	Fan Blade for 48480	72
AT396	Connection Pipe for 48480	73
70106	Dry Filter for 48480	74
AT397	High Pressure Evaporation Tube for 48480	75
60652	High Pressure Evaporation Tube Pressure Plate for 48480	76
60655	Water Box for 48480	77
AL306	Pagoda Water Mouth-Processing for 48480	78

Parts Breakdown

Model RS-CN-0440-B 48480

Item No.	Description	Position
68301	Strong Magnet for 48480	79
AT398	Right Windshield of Condenser for 48480	80
AT414	Shutter - Plastic Coated for 48480	81
AT415	Lower Front Crosspiece - Plastic Coated for 48480	82
67648	Temperature Display for 48480	83
AR485	Switch (Higher Amp) for 48480	84
60666	Temperature Probe for 48480	85

Item No.	Description	Position
AD481	Overheating Probe for 48480	86
60670	PPR Tube Strap for 48480	87
60669	Pressing Plate of Dry Filter for 48480	88
60668	Drain Pipe for 48480	89
68398	Copper Connection for 48480	90
AT401	Condenser for 48480	91
AO865	Filter Pressure Plate for 48480	92

Item No.	Description	Position
AT402	Left Windshield of Condenser for 48480	93
60663	Switch Display Bracket for 48480	94
AL357	Castor without Brake for 48480	95
60672	Feet for 48480	96
AC057	Power Cord for 48480	97
66095	Wire Clip Cover for 48480	98
61246	Wire Clip Holder for 48480	99

Parts Breakdown

Model RS-CN-0530-B 48265

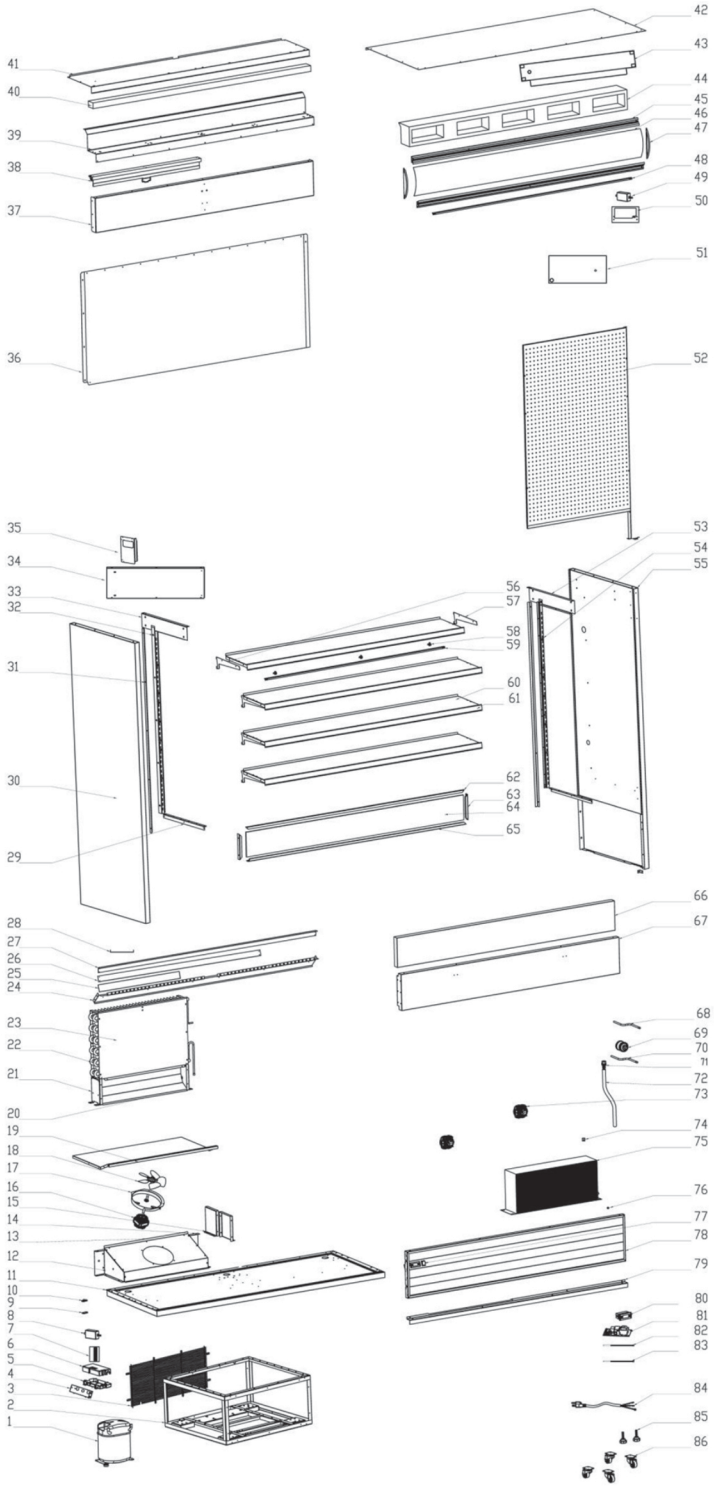

Parts Breakdown

Model RS-CN-0530-B 48265

Item No.	Description	Position
AP390	Compressor for 48265	1
AP391	Base for 48265	2
60599	Mesh Guard in Base for 48265	3
AO860	Wiring Box for 48265	4
61167	Circuit Board Box for 48265	5
60594	Cover of Circuit Board Box for 48265	6
AO861	Cap of Juncting Box for 48265	7
AO862	LED Transformer for 48265	8, 49
61246	Wire Clip Holder for 48265	9
66095	Wire Clip Cover for 48265	10
60601	Foam of Base Plate for 48265	11
60602	Left Board of Evaporator Cover for 48265	12
60603	Evaporator Cover for 48265	13
60643	Left Plate of Evaporator Motor for 48265	14
60632	Middle Support Pillar of Air Intake for 48265	15
AL374	Evaporator Fan Motor for 48265	16
60641	Fan Guard for 48265	17
60640	Fan Blade for 48265	18
AQ660	Plate of Left/Right Air Intake for 48265	19
60605	Evaporator Ventilation Damper for 48265	20
60604	Evaporator Holder for 48265	21
AO864	Evaporator for 48265	22
60607	Evaporator Damper for 48265	23
60608	Evaporator Wind Screen for 48265	24
60648	Lower Front Baffle Assembly for 48265	25
60617	Rear Foam Baffle for 48265	26
66096	Back Upper Crosspiece for 48265	27
AO865	Filter Pressure Plate for 48265	28
60610	Parry of Lower Air Intake for 48265	29
AQ661	Left Side Board for 48265	30
60613	Dead Plate of Rear Foam for 48265	31
AQ662	Left Support Pillar of Shelf for 48265	32
60615	Parry of Right Lining Plate for 48265	33
AP392	Condensator Right Windshield for 48265	34
AP393	Left Windshield of Condenser for 48265	35
AQ663	Upper Back Plate for 48265	36
AQ664	Upper Front Board for 48265	37
66097	Night Curtain for 48265	38
AQ665	Damper of Upper Air Outlet for 48265	39
66099	Honeycomb Panel for 48265	40
AQ666	Cover of Upper Air Outlet for 48265	41
AQ667	Upper Cover Plate for 48265	42
67647	The Left of the Evaporator Water Box for 48265	43
60698	Lining Foam for 48265	44
60626	Lampshade Frame for 48265	45
60627	Lampshade for 48265	46
60628	Holder of Lampshade Frame for 48265	47
AQ668	Constant Voltage Patch LED Light for 48265	48
68392	Water Box Bracket for 48265	50
60655	Water Box for 48265	51
AO876	Ventilated Board for 48265	52
60629	Parry of Right Lining Plate for 48265	53
AQ669	Right Support Pillar of Shelf for 48265	54
AQ670	Right Side Board for 48265	55
AP395	Left Support Pillar of Shelf for 48265	56
AP396	Right Support Pillar of Shelf for 48265	57
AD500	Jump Ring of LED for 48265	58
AQ671	Constant Voltage Patch LED Light for 48265	59
AO882	General Assembly for Shelves for 48265	60
60639	Price Tag Holder for 48265	61
60644	Decoration Strip of Glass Deflector for 48265	62
60647	Strip of Glass Deflector 2 for 48265	63
AQ672	Glass Deflector for 48265	64
60645	Strip of Glass Deflector for 48265	65
60649	PE for Lower Board for 48265	66
AQ673	Lower Front Board for 48265	67
AP398	Capillary Filter Connection Tube for 48265	68
70106	Dry Filter for 48265	69
AP399	Joint Pipe of Dry Filter for 48265	70
AL576	Drain Joint for 48265	71
60668	Drain Pipe for 48265	72
AD518	Condenser Fan Motor for 48265	73
60633	Side Plate Connector for 48265	74
AP401	Condenser for 48265	75
68301	Strong Magnet for 48265	76
AR485	Switch (Higher Amp) for 48265	77
AQ674	Window Shutter for 48265	78
AQ675	Lower Front Crosspiece for 48265	79
67648	Temperature Display for 48265	80
AF546	Main Circuit Board for 48265	81
60666	Temperature Probe for 48265	82
AO887	Defrost Probe for 48265	83
AC057	Power Cord for 48265	84
60672	Feet for 48265	85
AL357	Castor without Brake for 48265	86
60653	High Pressure Evaporation Tube for 48265	87
79359	Cover of Junction Box for 48265	88

Parts Breakdown

Model RS-CN-0530-B 48265

Item No.	Description	Position
61244	Terminal Box for 48265	89
AO888	PVC Pipe for 48265	90
60590	PVC Trucking for 48265	91
71518	Nut for 48265	92
60670	PPR Tube Strap for 48265	93

Item No.	Description	Position
79304	Pipe for Evaporated Water for 48265	94
AO889	Water Pipe for 48265	95
AL376	Circlip for 48265	96
AO890	Drainage Pipe Bracket for 48265	97
60652	High Pressure Evaporation Tube Pressure Plate for 48265	98

Item No.	Description	Position
60663	Switch Display Bracket for 48265	99
AL306	Pagoda Water Mouth-Processing for 48265	100
68398	Copper Connection for 48265	101
60669	Pressing Plate of Dry Filter for 48265	102

Parts Breakdown

Model RS-CN-0700-B 48266

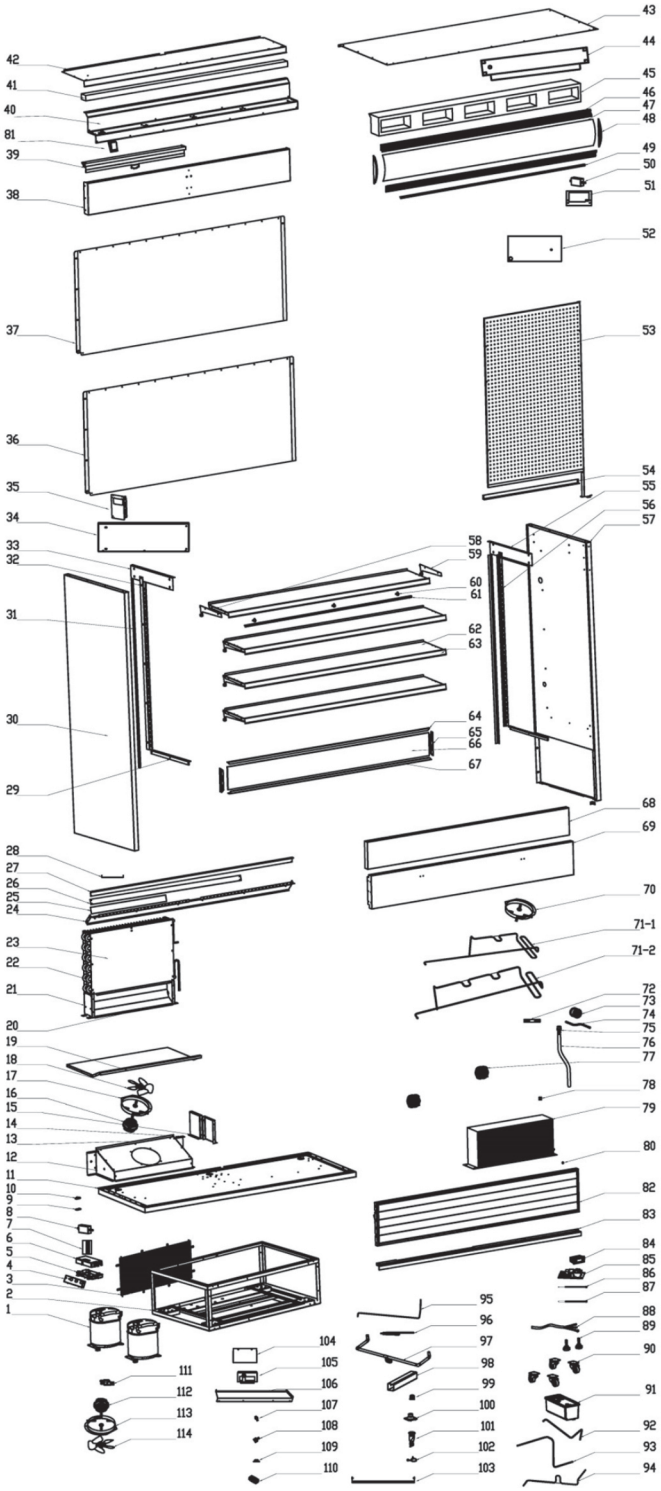

Parts Breakdown

Model RS-CN-0700-B 48266

Item No.	Description	Position
AP414	Compressor (R290) for 48266	1
AP415	Base for 48266	2
70133	Mesh Guard in Base for 48266	3
AO860	Wiring Box for 48266	4
61167	Circuit Board Box for 48266	5
60594	Cover of Circuit Board Box for 48266	6
AO861	Cap of Juncting Box for 48266	7
AO862	LED Transformer for 48266	8, 50
60676	Wire Clip Holder for 48266	9
60677	Wire Clip Cover for 48266	10
67653	Foam of Base Plate for 48266	11
60680	Left Board of Evaporator Cover for 48266	12
70154	Evaporator Cover for 48266	13
60681	Left Plate of Evaporator Motor for 48266	14
60684	Middle Support Pillar of Air Intake for 48266	15
AO892	Evaporator Fan Motor for 48266	16, 77
60641	Fan Guard for 48266	17, 70
60640	Fan Blade for 48266	18
AQ676	Plate of Left/Right Air Intake for 48266	19
67654	Evaporator Ventilation Damper for 48266	20
60604	Evaporator Holder for 48266	21
AP416	Evaporator for 48266	22
67655	Evaporator Damper for 48266	23
67656	Evaporator Wind Screen for 48266	24
70153	Lower Front Baffle Assembly for 48266	25
70120	Rear Foam Baffle for 48266	26
70143	Back Upper Crosspiece for 48266	27
AO865	Filter Pressure Plate for 48266	28
60610	Parry of Lower Air Intake for 48266	29
AQ661	Left Side Board for 48266	30
60613	Dead Plate of Rear Foam for 48266	31
AQ662	Left Support Pillar of Shelf for 48266	32
60615	Parry of Right Lining Plate for 48266	33
AP417	Condensator Right Windshield for 48266	34
AQ677	Left Windshield of Condenser for 48266	35
AQ678	Lower Back Plate for 48266	36
AQ679	Upper Back Plate for 48266	37
AQ680	Upper Front Board for 48266	38
66104	Night Curtain for 48266	39
AQ681	Damper of Upper Air Outlet for 48266	40
67660	Honeycomb Panel for 48266	41
AQ682	Cover of Upper Air Outlet for 48266	42
AQ683	Upper Cover Plate for 48266	43
AO902	The Left of the Evaporator Water Box for 48266	44
60698	Lining Foam for 48266	45
70141	Lampshade Frame for 48266	46
70142	Lampshade for 48266	47
60628	Holder of Lampshade Frame for 48266	48
AO903	Constant Voltage Patch LED Advertising Board Light for 48266	49
68392	Water Box Bracket for 48266	51
60655	Water Box for 48266	52
AQ684	Ventilated Board for 48266	53
67662	Back Support for Board at Air Intake for 48266	54
60629	Parry of Right Lining Plate for 48266	55
AQ669	Right Support Pillar of Shelf for 48266	56
AQ670	Right Side Board for 48266	57
AO905	Left/Right Support Pillar of Shelf for 48266	58, 59
AD500	Jump Ring of LED for 48266	60
AO906	Constant Voltage Patch LED Light for 48266	61
AO907	General Assembly for Shelves for 48266	62
67665	Price Tag Holder Black for 48266	63
70151	Decorating Strip of Glass Deflector for 48266	64
70149	Strip of Glass Deflector 2 for 48266	65
67666	Glass Deflector for 48266	66
60645	Strip of Glass Deflector for 48266	67
67667	PE for Lower Board for 48266	68
AQ685	Lower Front Board for 48266	69
AP420	Right High Voltage Evaporating Pipe for 48266	71–1
AP421	Left High Voltage Evaporating Pipe for 48266	71–2
AO890	Drainage Pipe Bracket for 48266	72
70106	Dry Filter for 48266	73
AP422	Joint Pipe of Dry Filter for 48266	74
AL576	Drain Joint for 48266	75
60668	Drain Pipe for 48266	76
60633	Side Plate Connector for 48266	78
AP423	Condenser for 48266	79
68301	Strong Magnet for 48266	80
AR485	Switch (Higher Amp) for 48266	81
AQ686	Window Shutter for 48266	82
AQ687	Lower Front Crosspiece for 48266	83
67648	Temperature Display for 48266	84
AP424	Main Circuit Board for 48266	85
60666	Temperature Probe for 48266	86
AO887	Defrost Probe for 48266	87
AO911	Power Cord for 48266	88
60672	Feet for 48266	89
AL357	Castor without Brake for 48266	90

Parts Breakdown

Model RS-CN-0700-B 48266

Item No.	Description	Position
67651	Water Connection Box Component for 48266	91
AP425	Connecting Tube for Right Condenser and Dry Filter for 48266	92
AP426	Connecting Tube for Left Condenser and Dry Filter for 48266	93
AP427	Right Air Return Duct for 48266	94
AP428	Left Air Return Duct for 48266	95
AP429	Tee Joint for 48266	96
AO888	PVC Pipe for 48266	97
60590	PVC Trucking for 48266	98
60670	PPR Tube Strap for 48266	99
79304	Pipe for Evaporated Water for 48266	100
AO889	Water Pipe for 48266	101
AL376	Circlip for 48266	102
60652	High Pressure Evaporation Tube Pressure Plate for 48266	103
AP430	Baffle Board of Evaporator Motor for 48266	104
AP403	Switch Display Bracket for 48266	105
AP431	Top Baffle Board of Condenser for 48266	106
AL306	Pagoda Water Mouth-Processing for 48266	107
68398	Copper Connection for 48266	108
60669	Pressing Plate of Dry Filter for 48266	109
AP432	Wago Wire Connector for 48266	110
AP433	American Plug for 48266	111
70111	Fan Motor for 48266	112
60932	Fan Guard for 48266	113
60933	Fan Blade for 48266	114

Parts Breakdown

Model RS-CN-1050-B 48269

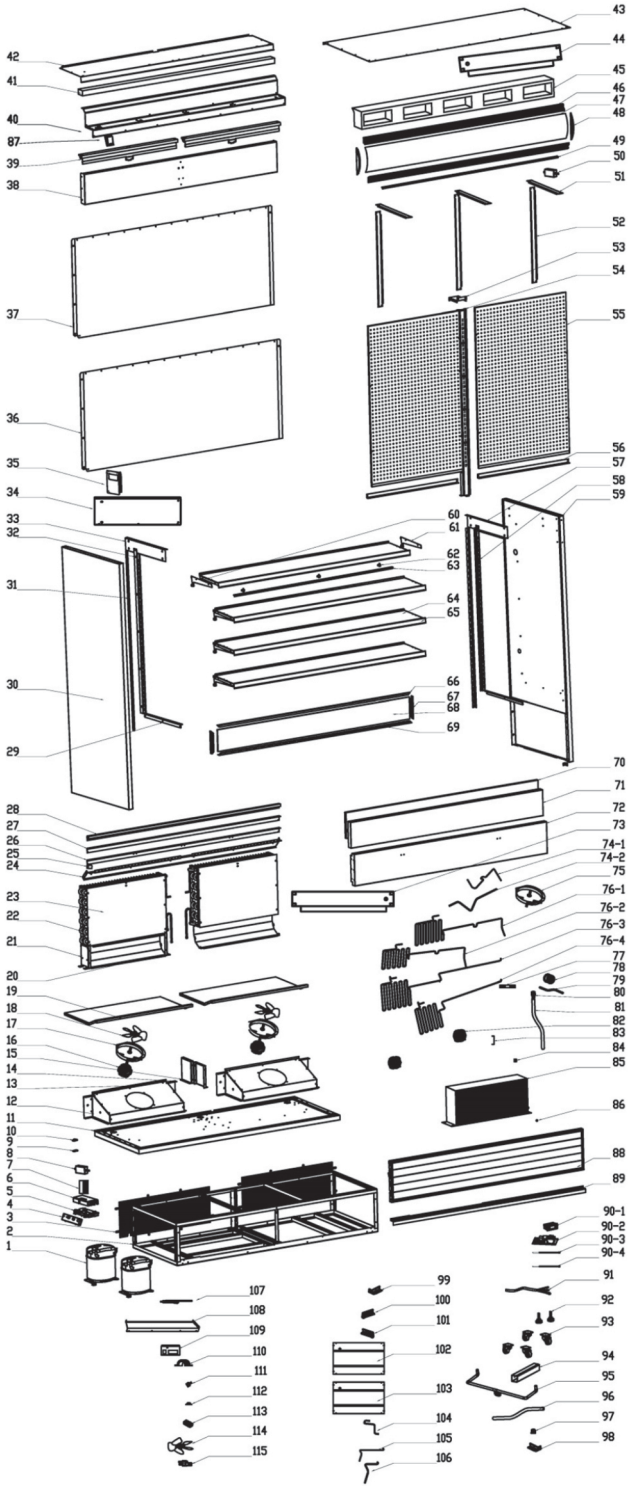

Parts Breakdown

Model RS-CN-1050-B 48269

Item No.	Description	Position
AP414	Compressor (R290) for 48269	1
AP434	Base for 48269	2
60599	Mesh Guard in Base for 48269	3
AO860	Wiring Box for 48269	4
61167	Circuit Board Box for 48269	5
60594	Cover of Circuit Board Box for 48269	6
AO861	Cap of Juncting Box for 48269	7
AO862	LED Transformer for 48269	8, 50
60676	Wire Clip Holder for 48269	9
60677	Wire Clip Cover for 48269	10
60679	Foam of Base Plate for 48269	11
60680	Left Board of Evaporator Cover for 48269	12
60603	Evaporator Cover for 48269	13
60681	Left Plate of Evaporator Motor for 48269	14
60684	Middle Support Pillar of Air Intake for 48269	15
AO892	Evaporator Fan Motor for 48269	16
60932	Fan Guard for 48269	17
60640	Fan Blade for 48269	18
AQ688	Plate of Left/Right Air Intake for 48269	19
60605	Evaporator Ventilation Damper for 48269	20
60604	Evaporator Holder for 48269	21
AO864	Evaporator for 48269	22
60607	Evaporator Damper for 48269	23
60683	Evaporator Wind Screen for 48269	24
AO912	Shock-Absorbing Parts for 48269	25
67676	Crosspiece of Back Foam for 48269	26
66105	Back Upper Crosspiece for 48269	27
67677	Thicker Crosspiece of Back Ventilated Board for 48269	28
60610	Parry of Lower Air Intake for 48269	29
AQ661	Left Side Board for 48269	30
60613	Dead Plate of Rear Foam for 48269	31
AQ662	Left Support Pillar of Shelf for 48269	32
60615	Parry of Right Lining Plate for 48269	33
AP435	Right Windshield of Condenser for 48269	34
AP436	Left Windshield of Condenser for 48269	35
AQ689	Lower Back Plate for 48269	36
AQ690	Upper Back Plate for 48269	37
AQ691	Upper Front Board for 48269	38
60692	Night Curtain for 48269	39
AQ692	Damper of Upper Air Outlet for 48269	40
60694	Honeycomb Panel for 48269	41
AQ693	Cover of Upper Air Outlet for 48269	42
AQ694	Upper Cover Plate for 48269	43
AO920	The Left of the Evaporator Water Box for 48269	44
60698	Lining Foam for 48269	45
60700	Lampshade Frame for 48269	46
60701	Lampshade for 48269	47
60628	Holder of Lampshade Frame for 48269	48
AO921	LED in Light Box for 48269	49
60696	Vertical Plate of Upper Foam for 48269	51
67684	Vertical Plate of Back Foam for 48269	52
60686	Holding Plate of Back Foam Crosspiece for 48269	53
AQ695	Middle Support Pillar of Shelf for 48269	54
AQ696	Ventilated Board for 48269	55
60703	Back Support for Board at Air Intake for 48269	56
60629	Parry of Right Lining Plate for 48269	57
AQ669	Right Support Pillar of Shelf for 48269	58
AQ670	Right Side Board for 48269	59
AO905	Left/Right Support Pillar of Shelf for 48269	60, 61
AP437	Jump Ring of LED Light for 48269	62
AO924	LED for 48269	63
AP438	General Assembly for Shelves for 48269	64
60709	Price Tag Holder for 48269	65
60712	Decorating Strip of Glass Deflector for 48269	66
60710	Strip of Glass Deflector 2 for 48269	67
67686	Glass Deflector for 48269	68
60645	Strip of Glass Deflector for 48269	69
60713	Lower Front Board Components for 48269	70
60714	PE for Lower Board for 48269	71
AQ697	Lower Front Board for 48269	72
AO927	The Right Side of the Evaporator Water Box for 48269	73
AP439	Right Joint Pipe of Compressor for 48269	74--1
AP440	Left Joint Pipe of Compressor for 48269	74--2
60641	Fan Guard for 48269	75
AP441	Right Bottom High Pressure Evaporating Tube for 48269	76--1
AP442	Left Bottom High Pressure Evaporating Tube for 48269	76--2
AP443	Right Top High Pressure Evaporating Tube for 48269	76--3
AP444	Left Top High Pressure Evaporating Tube for 48269	76--4
AO929	The Bracket on the Water Pipe for 48269	77
70106	Dry Filter for 48269	78
AP422	Joint Pipe of Dry Filter for 48269	79

Parts Breakdown

Model RS-CN-1050-B 48269

Item No.	Description	Position
AO930	Drain Joint for 48269	80
AO931	Drain Pipe for 48269	81
70111	Fan Motor for 48269	82
AO932	Under-Wear Pipe Bracket for 48269	83
60633	Side Plate Connector for 48269	84
AP423	Condenser for 48269	85
68301	Strong Magnet for 48269	86
AR485	Switch (Higher Amp) for 48269	87
AQ698	Window Shutter for 48269	88
AQ699	Lower Front Crosspiece for 48269	89
67648	Temperature Display for 48269	90-1
AP424	Main Circuit Board for 48269	90-2
AO934	Temperature Probe for 48269	90-3

Item No.	Description	Position
AO887	Defrost Probe for 48269	90-4
AC057	Power Cord for 48269	91
60672	Feet for 48269	92
AL357	Castor without Brake for 48269	93
60590	PVC Trucking for 48269	94
AO888	PVC Pipe for 48269	95
60668	Drain Pipe for 48269	96
60670	PPR Tube Strap for 48269	97
AP445	Right Rear Bracket of Evaporating Pan for 48269	98
AP446	Right Front Bracket of Evaporating Pan for 48269	99
AP447	Left Rear Bracket of Evaporating Pan for 48269	100
AP448	Left Front Bracket of Evaporating Pan for 48269	101
AP449	Bottom Evaporating Pan Assembly for 48269	102

Item No.	Description	Position
AP450	Top Evaporating Pan Assembly for 48269	103
AP451	High Pressure Evaporation Connect Tube for 48269	104
AP452	Connecting Tube for Right Condenser and Dry Filter for 48269	105
AP453	Connecting Tube for Left Condenser and Dry Filter for 48269	106
AP429	Tee Joint for 48269	107
AP454	Top Baffle Board of Condenser for 48269	108
AP403	Switch Display Bracket for 48269	109
AO865	Filter Pressure Plate for 48269	110
68398	Copper Connection for 48269	111
60669	Pressing Plate of Dry Filter for 48269	112
AP432	Wago Wire Connector for 48269	113
60933	Fan Blade for 48269	114
AP433	American Plug for 48269	115

Electrical Schematics

Model RS-CN-0440 48479
Model RS-CN-0440-B 48480

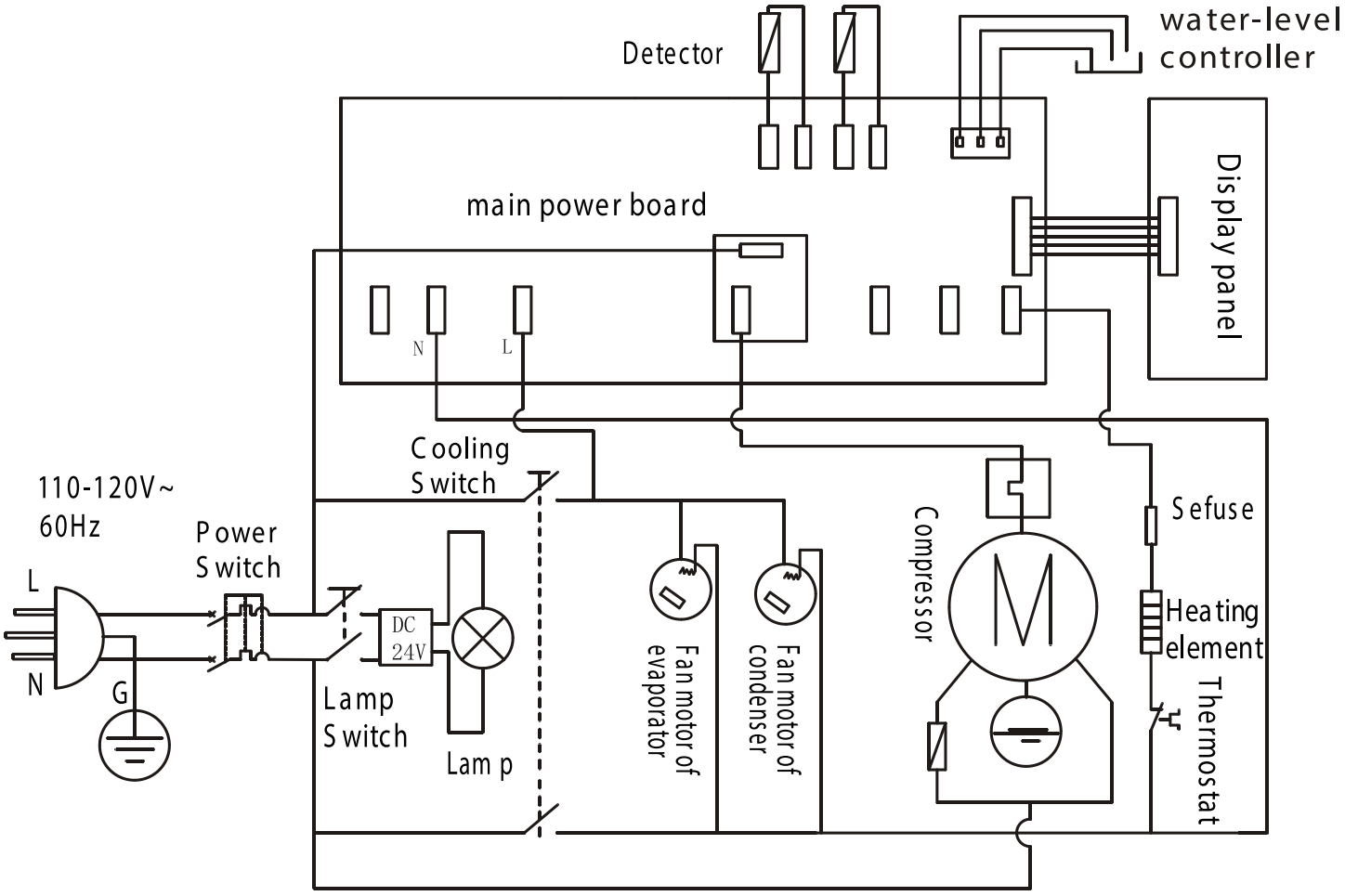



Electrical Schematics

Model RS-CN-0530 43459
Model RS-CN-0530-B 48265

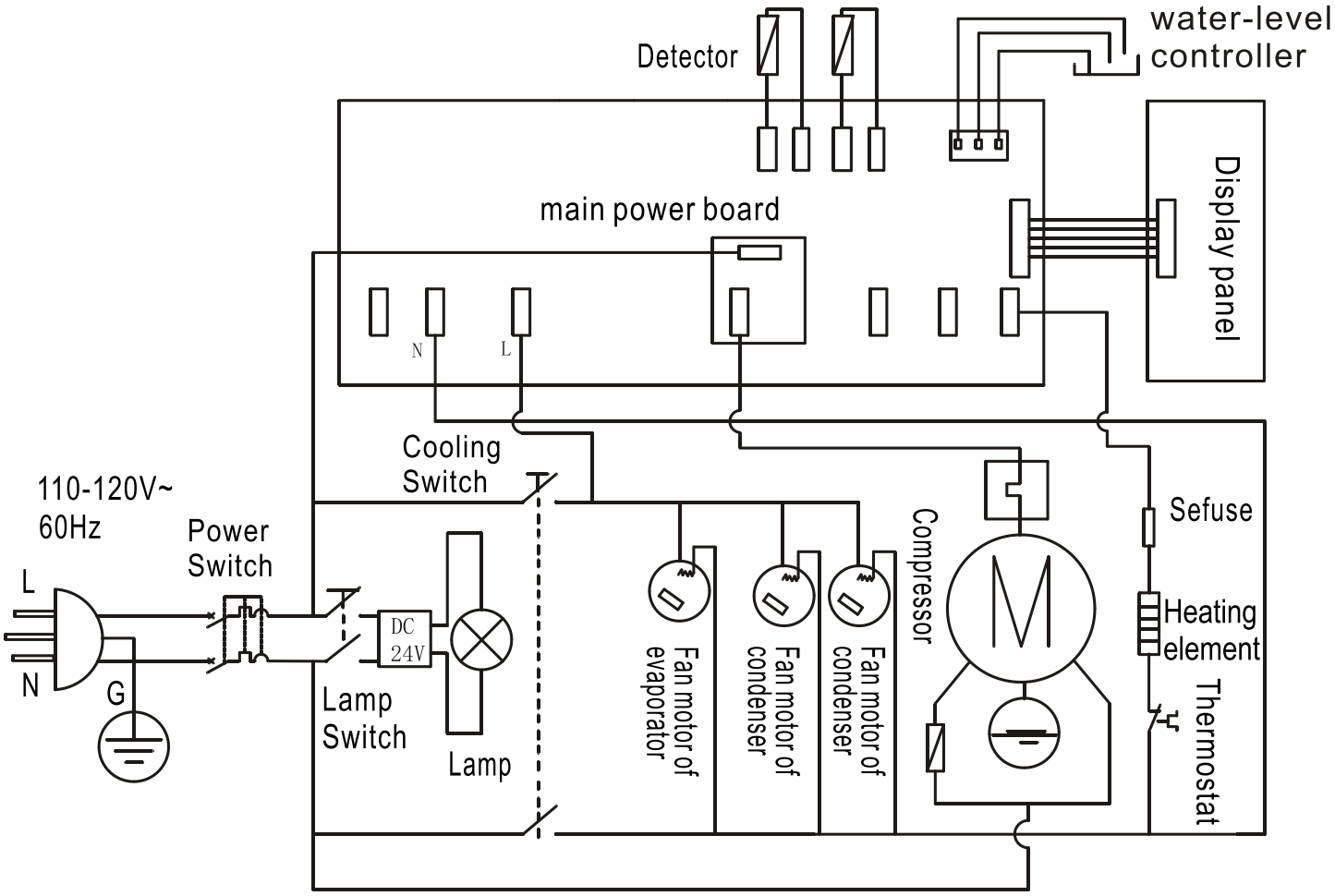



Electrical Schematics

Model RS-CN-0700 41469
Model RS-CN-0700-B 48266

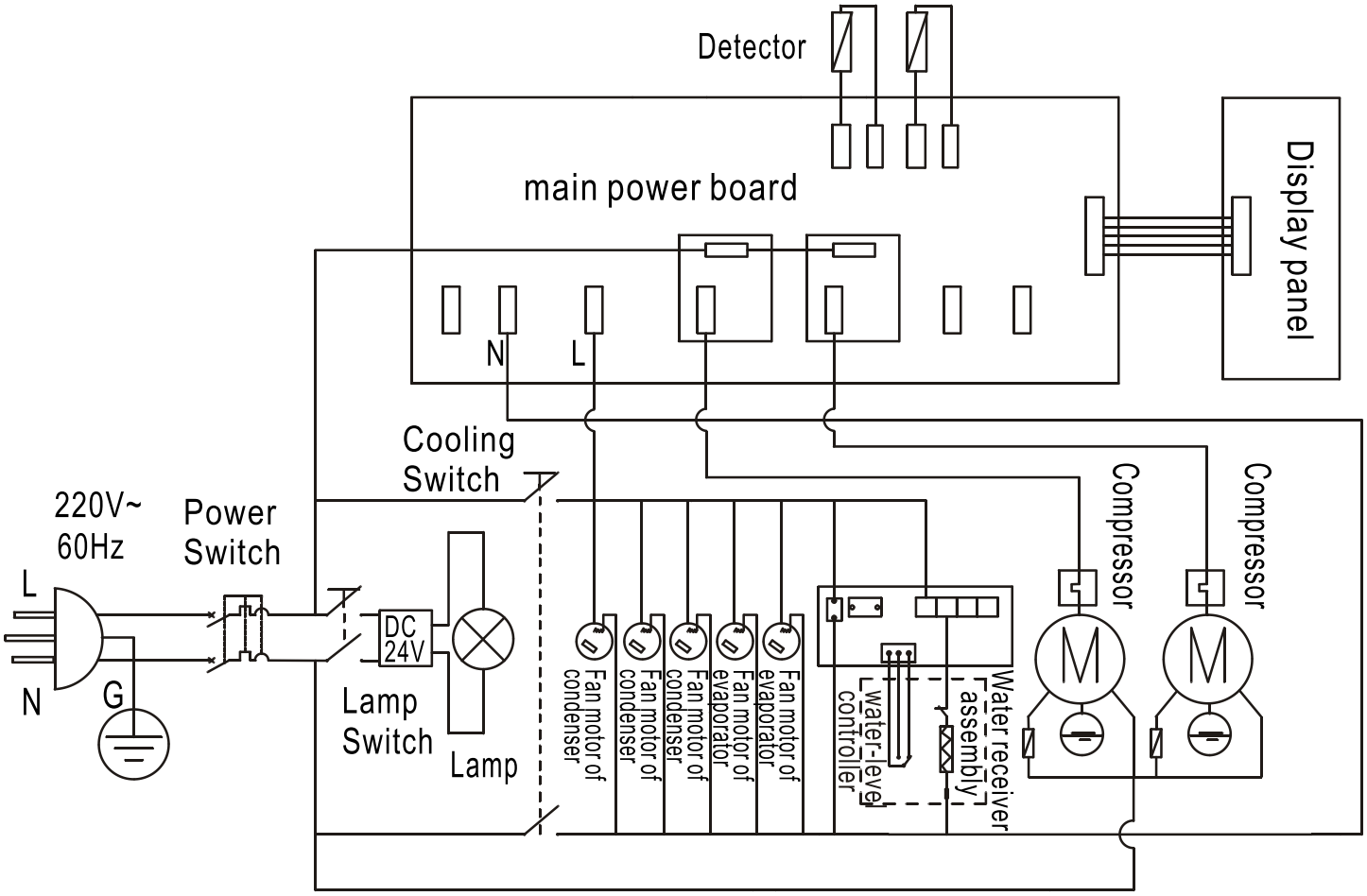



Electrical Schematics

Model RS-CN-1050 43460
Model RS-CN-1050-B 48269

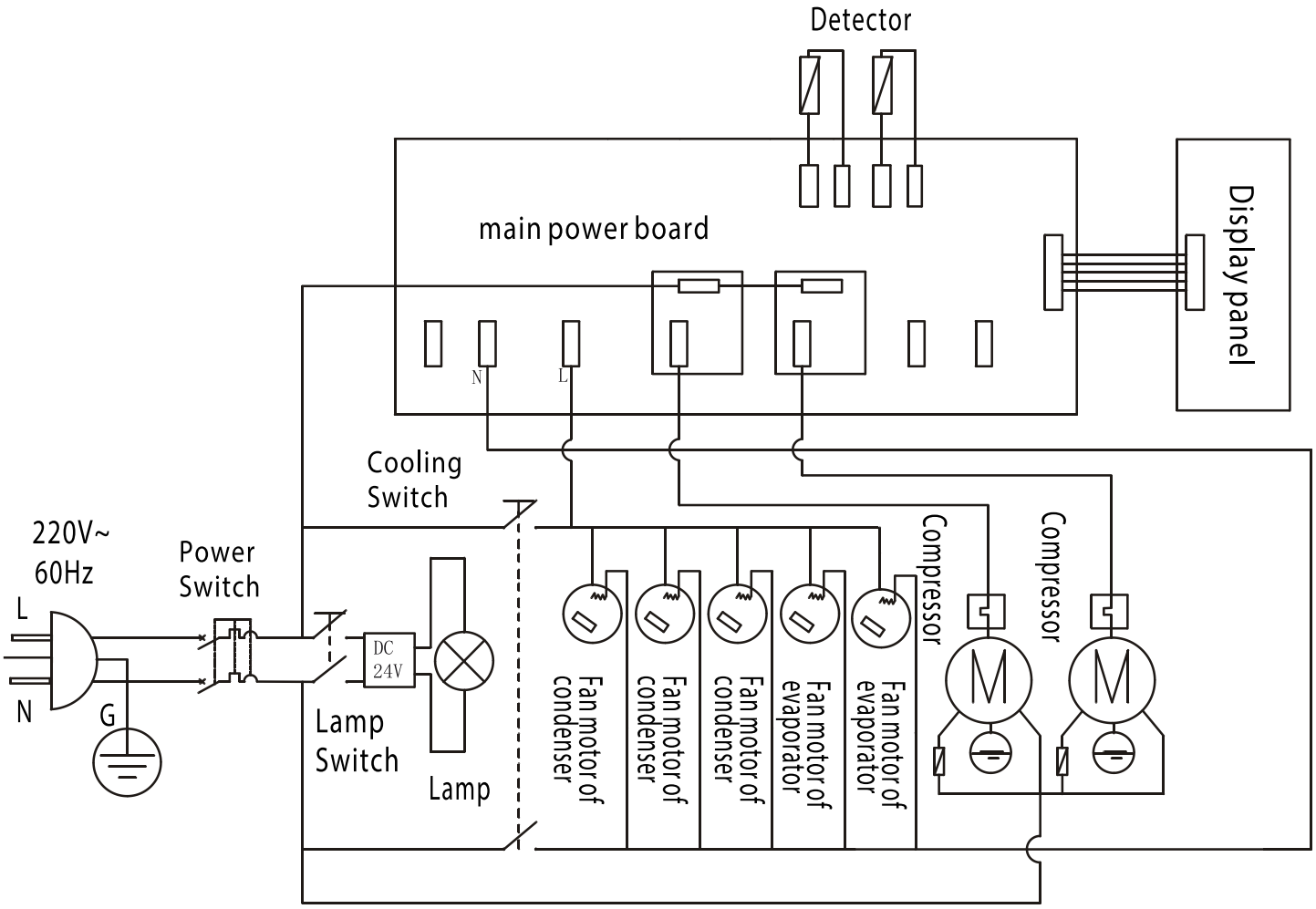



Notes

Notes

Notes

Warranty Registration

Thank you for purchasing an Omcan product. To register your warranty for this product, complete the information below, tear off the card at the perforation and then send to the address specified below. You can also register online by visiting:

Merci d'avoir acheté un produit Omcan. Pour enregistrer votre garantie pour ce produit, complétez les informations ci-dessous, détachez la carte au niveau de la perforation, puis l'envoyer à l'adresse spécifié ci-dessous. Vous pouvez également vous inscrire en ligne en visitant:

Gracias por comprar un producto Omcan usted. Para registrar su garantía para este producto, complete la información a continuación, cortar la tarjeta en la perforación y luego enviarlo a la dirección indicada a continuación. También puede registrarse en línea en:

https://omcan.com/warranty-registration/

For mailing in Canada
Pour postale au Canada
Por correo en Canadá

OMCAN
PRODUCT WARRANTY REGISTRATION
3115 Pepper Mill Court,
Mississauga, Ontario
Canada, L5L 4X5

For mailing in the US
Pour diffusion aux États-Unis
Por correo en los EE.UU.

OMCAN
PRODUCT WARRANTY REGISTRATION
4450 Witmer Industrial Estates, Unit 4,
Niagara Falls, New York
USA, 14305

or email to: service@omcan.com

Purchaser's Information

Name: _____ Company Name: _____

Address: _____

Telephone: _____

City: _____ Province or State: _____ Postal or Zip: _____ Email Address: _____

Country: _____ Type of Company:

☐ Restaurant ☐ Bakery ☐ Deli

Dealer from which Purchased: _____ ☐ Butcher ☐ Supermarket ☐ Caterer

Dealer City: _____ Dealer Province or State: _____ ☐ Institution *(specify)*: _____

Invoice: _____ ☐ Other *(specify)*: _____

Model Name: _____ Model Number: _____ Serial Number: _____

Machine Description: _____

Date of Purchase (MM/DD/YYYY): _____ Date of Installation (MM/DD/YYYY): _____

Would you like to extend the warranty? ☐ Yes ☐ No

Thank you for choosing Omcan | Merci d'avoir choisi Omcan | Gracias por elegir Omcan

Since 1951 Omcan has grown to become a leading distributor of equipment and supplies to the North American food service industry. Our success over these many years can be attributed to our commitment to strengthen and develop new and existing relationships with our valued customers and manufacturers. Today with partners in North America, Europe, Asia and South America, we continually work to improve and grow the company. We strive to offer customers exceptional value through our qualified local sales and service representatives who provide convenient access to over 6,500 globally sourced products.

Depuis 1951 Omcan a grandi pour devenir un des “leaders” de la distribution des équipements et matériel pour l’industrie des services alimentaires en Amérique du Nord. Notre succès au cours de ces nombreuses années peut être attribué à notre engagement à renforcer et à développer de nouvelles et existantes relations avec nos clients et les fabricants de valeur. Aujourd’hui avec des partenaires en Amérique du Nord, Europe, Asie et Amérique du Sud, nous travaillons continuellement à améliorer et développer l’entreprise. Nous nous efforçons d’offrir à nos clients une valeur exceptionnelle grâce à nos ventes locales qualifiées et des représentants de service qui offrent un accès facile à plus de 6500 produits provenant du monde entier.

Desde 1951 Omcan ha crecido hasta convertirse en un líder en la distribución de equipos y suministros de alimentos en América del Norte industria de servicios. Nuestro éxito en estos años se puede atribuir a nuestro compromiso de fortalecer y desarrollar nuevas relaciones existentes con nuestros valiosos clientes y fabricantes. Hoy con socios de América del Norte, Europa, Asia y América del Sur, que trabajan continuamente para mejorar y crecer la empresa. Nos esforzamos por ofrecer a nuestros clientes valor excepcional a través de nuestro local de ventas y representantes de los servicios que proporcionan un fácil acceso a más de 6,500 productos con origen a nivel mundial.