High Temp Dishwasher

Model CD-GR-1500

Item 46797

Instruction Manual

STOP

DO NOT RETURN THIS PRODUCT TO THE STORE

For questions or assistance with this product call OMCAN Toll Free: 1 800 465 0234 Customer Service or visit the Support section of www.omcan.com

Revised - 09/23/2026

Toll Free: 1-800-465-0234
Fax: 905-607-0234
Email: service@omcan.com
www.omcan.com

MADE IN GREECE

Table of Contents

Model CD-GR-1500

Section	Page
General Information	3 - 4
Technical Specifications	5 - 7
Safety and Warranty	8 - 10
Installation	10 - 17
Operation	17 - 20
Maintenance	20 - 22
Troubleshooting	22 - 24
Parts Breakdown	25 - 39
Electrical Schematics	40
Notes	41
Installation Requirements and Checklist	42
Warranty Registration	43

General Information

Omcan Manufacturing and Distributing Company Inc., Food Machinery of America, Inc. dba Omcan and Omcan Inc. are not responsible for any harm or injury caused due to any person's improper or negligent use of this equipment. The product shall only be operated by someone over the age of 18, of sound mind, and not under the influence of any drugs or alcohol, who has been trained in the correct operation of this machine, and is wearing authorized, proper safety clothing. Any modification to the machine voids any warranty, and may cause harm to individuals using the machine or in the vicinity of the machine while in operation.

CHECK PACKAGE UPON ARRIVAL

Upon receipt of an Omcan shipment please inspect for external damage. If no damage is evident on the external packaging, open carton to ensure all ordered items are within the box, and there is no concealed damage to the machine. If the package has suffered rough handling, bumps or damage (visible or concealed), please note it on the bill of lading before accepting the delivery and contact Omcan within 24 hours, so we may initiate a claim with the carrier. A detailed report on the extent of the damage caused to the machine must be filled out within three days, from the delivery date shown in the shipping documents. Omcan has no recourse for damaged products that were shipped collect or third party.

Before operating any equipment, always read and familiarize yourself with all operation and safety instructions.

Omcan would like to thank you for purchasing this machine. It's of the utmost importance to save these instructions for future reference. Also save the original box and packaging for shipping the equipment if servicing or returning of the machine is required.

Omcan Fabrication et distribution Companie Limité et Food Machinery d'Amerique, dba Omcan et Omcan Inc. ne sont pas responsables de tout dommage ou blessure causé du fait que toute personne ait utilisé cet équipement de façon irrégulière. Le produit ne doit être exploité que par quelqu'un de plus de 18 ans, saine d'esprit, et pas sous l'influence d'une drogue ou d'acohol, qui a été formé pour utiliser cette machine correctement, et est vêtu de vêtements de sécurité approprié. Toute modification de la machine annule toute garantie, et peut causer un préjudice à des personnes utilisant la machine ou des personnes à proximité de la machine pendant son fonctionnement.

VÉRIFIEZ LE COLIS DÈS RÉCEPTION

Dès réception d'une expédition d'Omcan veuillez inspecter pour dommages externes. Si aucun dommage n'est visible sur l'emballage externe, ouvrez le carton afin de s'assurer que tous les éléments commandés sont dans la boîte, et il n'y a aucun dommage dissimulé à la machine. Si le colis n'a subi aucune mauvaises manipulations, de bosses ou de dommages (visible ou cachée), notez-le sur le bond de livraison avant d'accepter la livraison et contactez Omcan dans les 24 heures qui suivent, pour que nous puissions engager une réclamation auprès du transporteur. Un rapport détaillé sur l'étendue des dommages causés à la machine doit être rempli dans un délai de trois jours, à compter de la date de livraison indiquée dans les documents d'expédition. Omcan n'a aucun droit de recours pour les produits endommagés qui ont été expédiées ou cueilli par un tiers transporteur.

Avant d'utiliser n'importe quel équipement, toujours lire et vous familiariser avec toutes les opérations et les

General Information

consignes de sécurité.

Omcan voudrais vous remercier d'avoir choisi cette machine. Il est primordial de conserver ces instructions pour une référence ultérieure. Également conservez la boîte originale et l'emballage pour l'expédition de l'équipement si l'entretien ou le retour de la machine est nécessaire.

Omcan Empresa De Fabricacion Y Distribucion Inc. Y Maquinaria De Alimentos De America, Inc. dba Omcan y Omcan Inc. no son responsables de ningun daño o perjuicío causado por cualquier persona inadecuada o el uso descuidado de este equipo. El producto solo podra ser operado por una persona mayor de 18 años, en su sano juicio y no bajo alguna influencia de droga o alcohol, y que este ha sido entrenado en el correcto funcionamiento de esta máquina, y ésta usando ropa apropiada y autorizada. Cualquier modificación a la máquina anúla la garantía y puede causar daños a las personas usando la máquina mientras esta en el funcionamiento.

REVISE EL PAQUETE A SU LLEGADA

Tras la recepcion de un envio Omcan favor inspeccionar daños externos. Si no hay daños evidentes en el empaque exterior, Habra el carton para asegurararse que todos los articulos solicitados ésten dentro de la caja y no encuentre daños ocultos en la máquina. Si el paquete ha sufrido un manejo de poco cuidado, golpes o daños (visible o oculto) por favor anote en la factura antes de aceptar la entrega y contacte Omcan dentro de las 24 horas, de modo que podamos iniciar una reclamación con la compañia. Un informe detallado sobre los daños causados a la máquina debe ser llenado en el plazo de tres días, desde la fecha de entrega que se muestra en los documentos de envío. Omcan no tiene ningun recurso por productos dañados que se enviaron a recoger por terceros.

Antes de utilizar cualquier equipo, siempre lea y familiarizarse con todas las instrucciones de funcionamiento y seguridad.

Omcan le gustaría darle las gracias por la compra de esta máquina. Es de la mayor importancia para salvar estas instrucciones para futuras consultas. Además, guarda la caja original y el embalaje para el envío del equipo si servicio técnico o devolución de la máquina que se requiere.

Technical Specifications

Item Number	**46797**
Model	**CD-GR-1500**
Basket Size	20” x 20” / 508 x 508mm
Electrical	208-240V / 60Hz / 1
Power	10500 W
Current	44 A
Wash Pump Motor	1.5 HP
Flow Pressure	20 psi ± 5
Water Consumption / Rack	0.7 gal (2nd program)
Water Consumption / Hour	13.2 gal/h
Water Inlet Connection	0.75” / 19mm
Draining Connection	1.2” / 30mm
Capacity	Booster tank: 7.4 L / Wash tank: 68 L
Heating Element	Booster tank: 7.5 kW / Wash tank: 6 kW
Rack / Hour (1st Program)	28
Rack / Hour (2nd Program)	19
Rack / Hour (3rd Program)	14
Wash Cycle 1	103 seconds
Wash Cycle 2	163 seconds
Wash Cycle 3	223 seconds
Rinse Cycle	16 seconds
Washing Temperature	74°C / 165°F
Rinsing Temperature	74°C / 165°F
Door Clearance	16” / 406mm
Useful Door Opening	15.5” / 394mm
Overall Dimensions	30” x 36” x 74” / 762 x 914 x 1880mm
Packaging Dimensions	30” x 35” x 57” / 762 x 889 x 1448mm
Packaging Weight	284 lbs. / 128.8 kgs.
Power Cord Length	Power supply cable without plug- 3x8 AWG, Length 2700MM

Technical Specifications

ELVIOMEX PROFESSIONAL WAREWASHING MACHINES

alfa ELVIOMEX s.a.

Model : CD-GR-1500

Wash Time (Sec) :
103 / 163 / 223

Minimum Wash
Temp. : 165 oF (74 oC)

Rinse Time
(Sec) : 16

Inlet Water
Pressure : 138 ± 34 kPa
(20 ± 5 psi)

Minimum Rinse
Temp. : 165 oF (74 oC)

NSF

Technical Specifications

PRODUCT SERIAL NUMBER

Safety and Warranty

THE FOLLOWING SYMBOLS INDICATE IMPORTANT INFORMATION THROUGHOUT THIS MANUAL.

CAUTION

Caution symbols indicate action or condition that can result in damage to the machine.

NOT APPROVED

Not approved symbols indicate action or condition that will diminish the optimum operation of the machine.

APPROVED

Approved symbols indicate action or condition that is safe and correct and should be followed.

WARNING

Warning symbols indicate action or condition that can be hazardous.

IMPORTANT NOTE

Note symbols indicate important information that should be followed for installing or operating the machine.

INDICATIONAL WARNINGS - CAUTIONS - NOTES

WARNING

Machine installation must comply with all local Health, Plumbing, Electrical and Safety codes.

WARNING

All Plumbing connections ARE PRIOR to the electrical installations and must be performed be qualified service personnel otherwise there is risk of damages to heating elements.

WARNING

Problems or Damages caused due to improper installation are not covered by the Limited Warranty.

CAUTION

All debris from the water supply line must be flushed before connecting it to the machine. Debris can damage the machine supply valves.

CAUTION

Handle with care when lifting or moving to avoid damage or leakings.

IMPORTANT NOTE

Plumbing and Electrical connections must allow the machine to move for service or cleaning.

WARNING

Before any electrical or service operation disconnect the main electrical supply and lock it out in order to clearly indicate that there is work in progress.

Safety and Warranty

1. **All pumping connections must be made prior to the electrical connection as otherwise there is high risk of damages to heating elements.**
   Damages due to negligence installation are not covered by the warranty.
2. Be careful when lifting or moving the dishwasher to avoid leaks or damages.

Do not use granular detergent. Poor results usually occur.

Do not use caustic products. This will void the guarantee.

Be sure all electrical supply specifications correspond to information label on machine.

The manufacturer/ distributor is not responsible for any possible damages or risks due to improper connection of this appliance.

I. Inspect the packaging for external damages.
II. Check that all the following accessories are inside the machine.
- 1 Glass basket.
- 1 Dish basket.
- 1 Cutlery basket.
- 1 Water inlet hose.
- 1 Pressure reducer valve (PRV).
- 4 Leveling feet.
- 4 Thread covers for leveling feet.
- 1 User manual.

RESIDENTIAL USERS: Vendor assumes no liability for parts or labor coverage for component failure or other damages resulting from installation in non-commercial or residential applications. The right is reserved to deny shipment for residential usage; if this occurs, you will be notified as soon as possible.

1 YEAR PARTS AND LABOUR WARRANTY

Within the warranty period, contact Omcan Inc. at 1-800-465-0234 to schedule an Omcan authorized service technician to repair the equipment locally.

Unauthorized maintenance will void the warranty. Warranty covers electrical and part failures, not improper use.

Please see https://omcan.com/disclaimer for complete info.

WARNING:

The packaging components are classified as normal solid urban waste and can therefore be disposed of without difficulty.

In any case, for suitable recycling, we suggest disposing of the products separately (differentiated waste)

Safety and Warranty

according to the current norms.

DO NOT DISCARD ANY PACKAGING MATERIALS IN THE ENVIRONMENT!

Installation

PLACEMENT

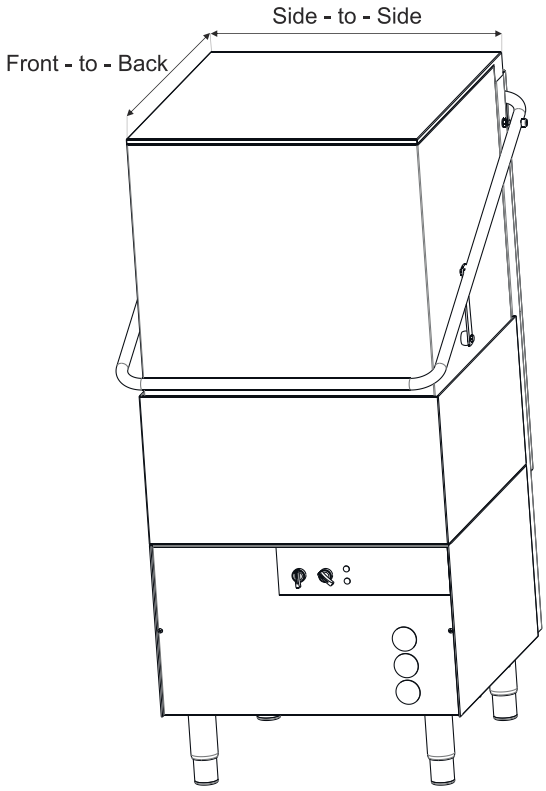

Installation

LEVEL THE MACHINE

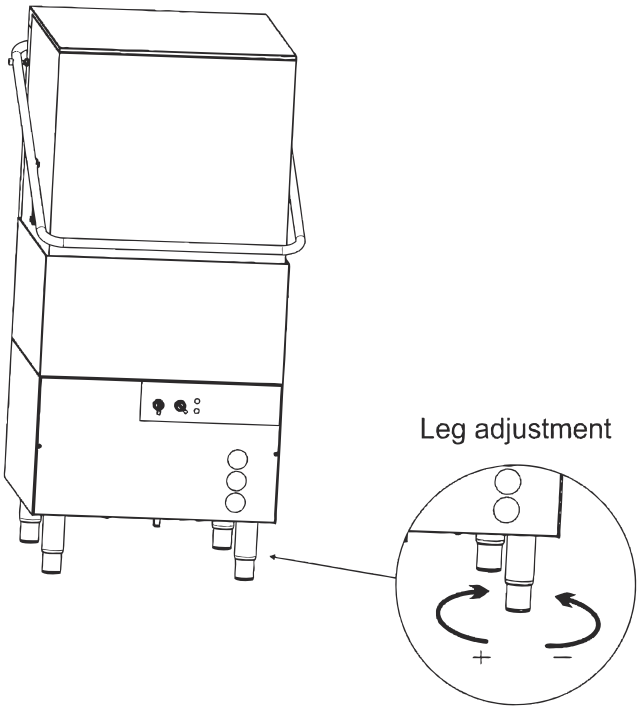

INSTALLATION SUGGESTIONS

- Place the dishwasher in the desired location.
- The appliance should leveled. Adjustable feet are provided for this adjustment.
- Level the machine front to back, and right to left.

PLACEMENT - CHEMICAL CONTAINERS

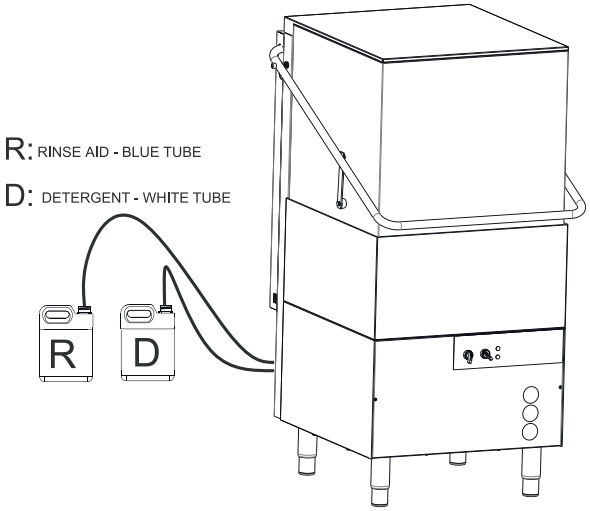

Installation

Chemical supply containers must be placed as close as possible to the machine and must not be elevated.

Reposition the chemical tubing at the back of the machine before placing the machine to its permanent position.

The unit should be installed by licensed and approved personnel according to all local codes.

This dishwasher is delivered with water inlet and outlet hoses.

WATER SUPPLY CONNECTION

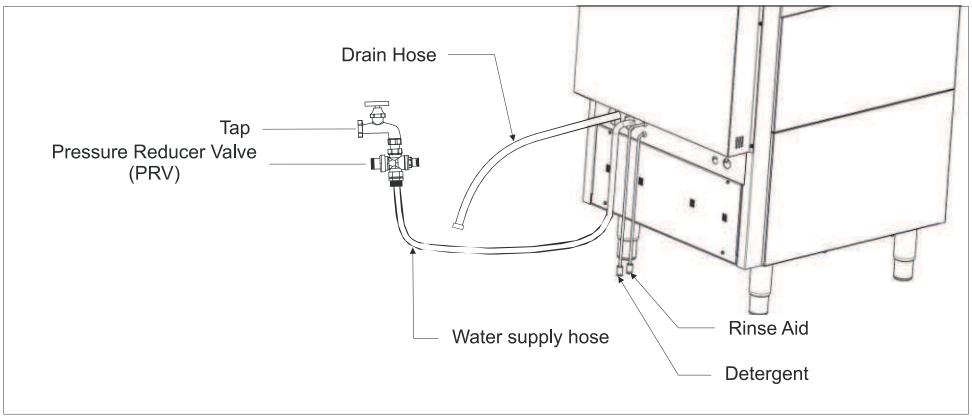

ATTENTION: Connection with the water supply should be made according to all applicable codes.

Machine must be connected to hot water source. Minimum income water temperature should be 40º.

A Pressure Regulator Valve must be inserted between the machine water inlet and the water source. Water pressure during flow (not static), must be regulated to 20 PSI. During pressure regulation please check the pressure gauge at the front of the machine.

This dishwasher intended for use with a hot water supply but will also operate (at slightly reduced hourly capacity) with a cold water supply.

- The water supply hose/pipe should be OD 14mm x ID 10mm and terminate in a ¾” NPT fitting (not garden hose).
- The water supply hose/pipe should be flushed before final connection.
- **Minimum flow pressure is 15 PSI and maximum is 25 PSI.**
- Connect hose at the ¾” NPT fitting on the water supply line.

PRESSURE REGULATOR VALVE ADJUSTMENT

DRAINAGE CONNECTION

Do not add extension to the drain hose otherwise warranty is void.

Installation

Outflow is accomplished by gravity (natural flow) in the CD-GR-1500. The outlet hose should be connected either directly to a floor drain or drain which must not be higher than the level of the outlet at the rear of the

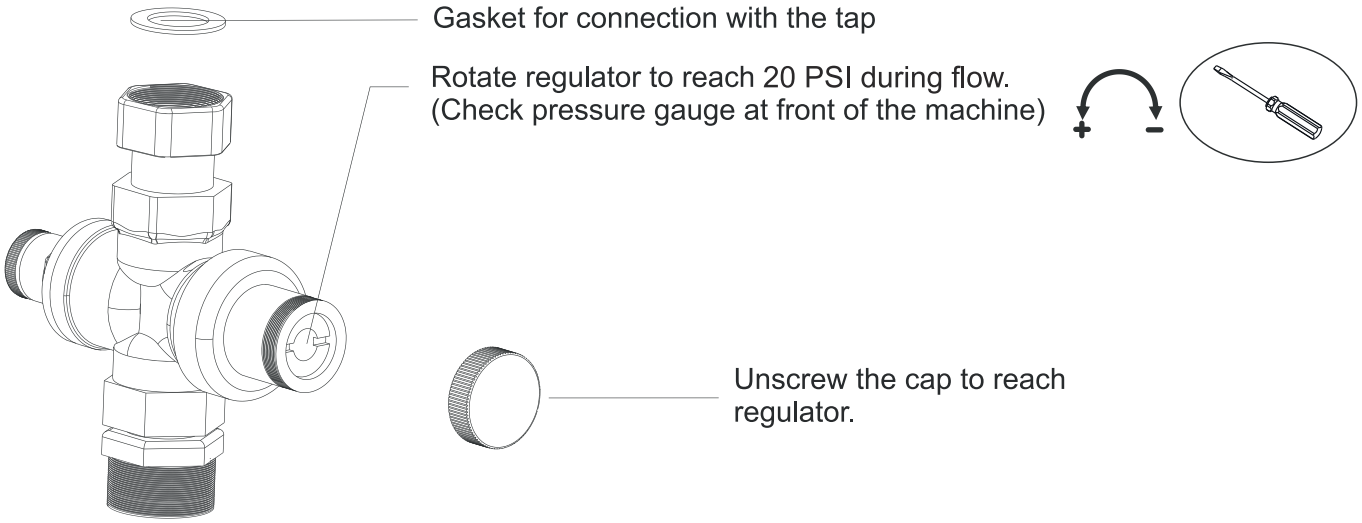

machine. An open drain connection or one to a vented drain pipe is recommended.

I. Connect the drain hose to the main draining.

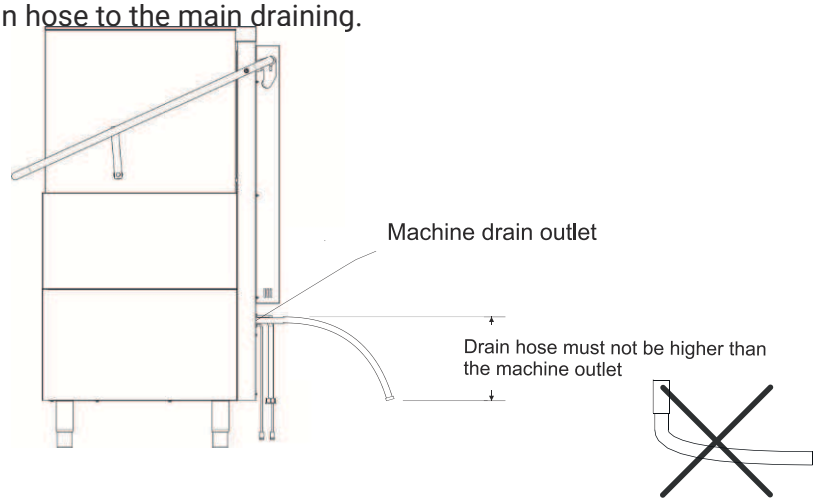

II. Connection must be made if the same flow with the draining pipe.

ATTENTION:

- Drain connection to a venting dedicated drain pipe is suggested.
- It is strongly advised NOT to connect the drain hose into the sink's draining.
- If an extension is added to the drain hose the warranty is voided.

ATTENTION:

- Make sure that no residuals remain to the water supply line before connecting it to the machine.
- Plumbing connections must be made in such way that will allow the machine to be moved for service and cleaning.
- PRV MUST be installed and adjust at 20 PSI otherwise the warranty is voided.

Installation

Min water inlet temp.	Operating flow pressure.	Min wash temperature.	Min rinse temperature.
40°C	20 ±5 PSI	165°F / 74°C	165°F / 74°C

- Connect the PRV valve in the water supply shut off valve.
- Connect the water supply hose to the PRV in one side and in the machine on the other side.

Attention: source water hardness must not intervene 10°F / 6 Gd.

ELECTRICAL CONNECTION

Attention: Before make any electrical connection or service, disconnect the main electrical supply and lock it out in order to clearly indicate that there is work in progress.

I. Open the lower front cover (2 bolts).
II. Loosen the two nuts of the electrical box cover and remove.
III. Connect the cable to the terminal block (Attention: strain relief knockout must be placed by the installer).

Caution: 15 cm loop of wire must be left inside the machine in order to allow servicing.

IV. Replace the top cover.
V. Replace and secure the lower front cover.

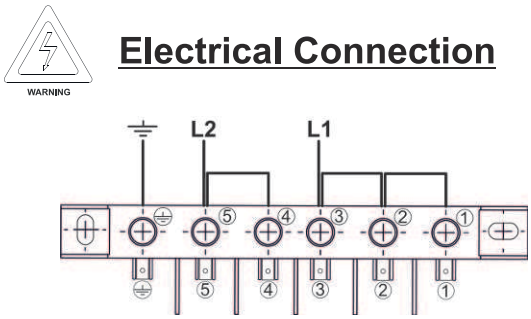

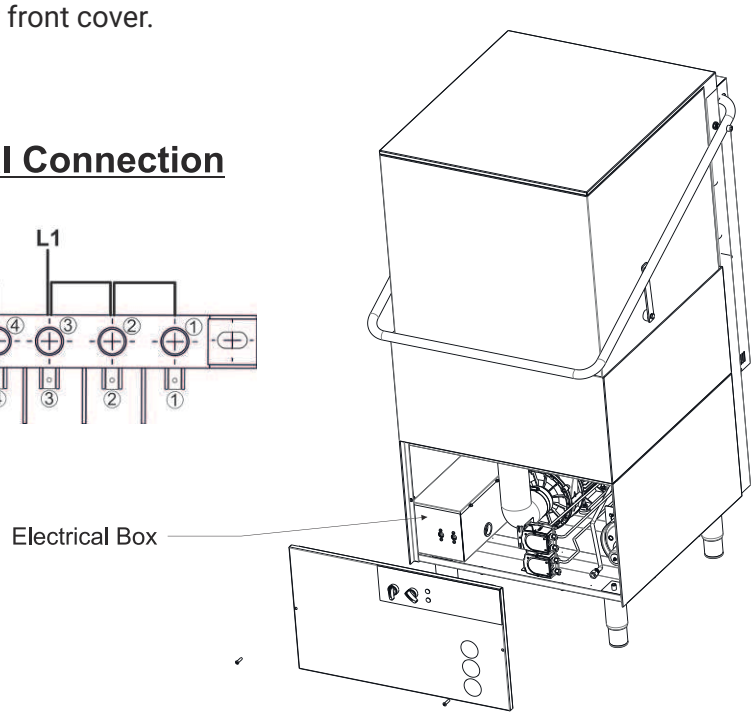

CONTROL PANEL

Code	Description	Code	Description

Installation

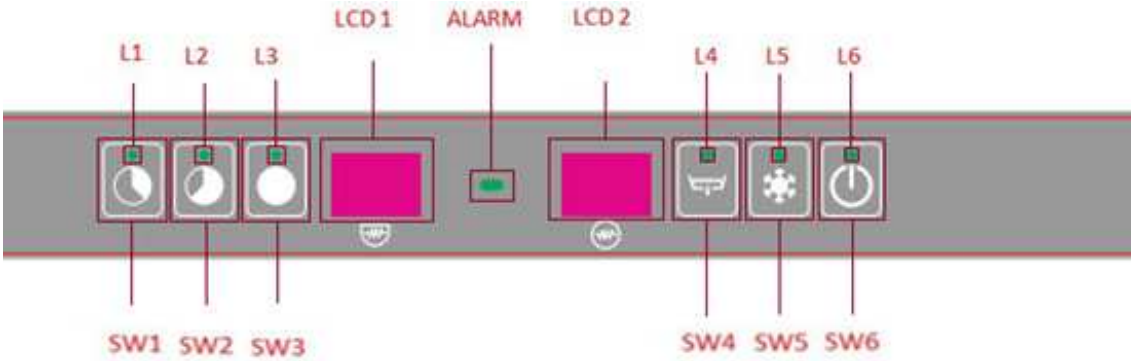

Alarm	LED Indicator: Green - Ready to use. Red - Alarm.	S2	Boiler LED Indicator.
L1	Washing Cycle LED Indicator 1 Minute.	SW1	Washing Cycle 1 Minute Button.
L2	Washing Cycle LED Indicator 2 Minutes.	SW2	Washing Cycle 2 Minutes Button.
L3	Washing Cycle LED Indicator 3 Minutes.	SW3	Washing Cycle 3 Minutes Button.
L4	Drain LED Indicator.	SW4	Drain Button.
L5	Cold Rinse LED Indicator.	SW5	Cold Rinse Button.
L6	On-Off LED Indicator.	SW6	On-Off Button.
S1	Wash Tank LED Indicator.		

This machine is equipped with peristaltic detergent and rinse aid pumps that are controlled through the PCB board. For that reason in order to adjust the dosing of each one you have to enter the User's Menu by following the below steps, please bear in mind that for each second the corresponding pump captures the following liquid quantities:

- Detergent pump: 0.83 ml/sec.
- Rinse Aid pump: 0.19 ml/sec.

By multiplying these quantities with the time duration (seconds) that the pump works, you can calculate the volume of each liquid that it is used.

To navigate in the user menu by pressing the buttons SW3 and SW4.
To increase the amount (+), press Button SW1.

Installation

IMPORTANT NOTE

To decrease the amount (-), press Button SW2.
To confirm the value changed, press Button SW5 once.

- Press hold Buttons SW1, SW3 & SW6 at the same time for 3 sec with the hood-door closed. LED L6 flashes and buzzer sounds three times. Message “conf” appears for a few seconds and the User’s Menu is activated.
- Select dF to adjust detergent quantity during initial filling.
- Select dC to adjust detergent quantity during each washing cycle.
- Select rF to adjust rinse aid quantity during initial filling.
- Select rC to adjust rinse aid quantity during each washing cycle.
- Exit the User’s Menu hold SW 6 for 3 sec. until to hear the buzzer sounds.

PRIME THE CHEMICAL PUMPS

Each pump is priming separately. To do that follow the steps bellow.

DETERGENT PUMP PRIMING:
- Dishwasher on standby (OFF).
- Door closed.
- Hold the buttons SW1, 3, 5 together.

RINSE AID PUMP PRIMING:
- Dishwasher on standby (OFF).
- Door closed.
- Hold the buttons SW1, 3, 4 together.

Caution: before you perform these adjustments, turn off the power supply. The dozer is adjusted from the manufacturer’s premises at its maximum value for easy initial priming and must be adjusted accordingly (depending on water hardness, how dirty the dishes are, and the detergent used).

SURFACE FILTERS - PUMP FILTER - OVERFLOW PIPE

Do not remove the internal filter (pump filter) if the tank is not empty.

PLEASE NOTE THAT THIS MACHINE DOES NOT COME EQUIPPED WITH A WATER TEMPERING KIT. THIS KIT MUST BE PURCHASED SEPARATELY FROM YOUR LOCAL SUPPLIER.

Installation

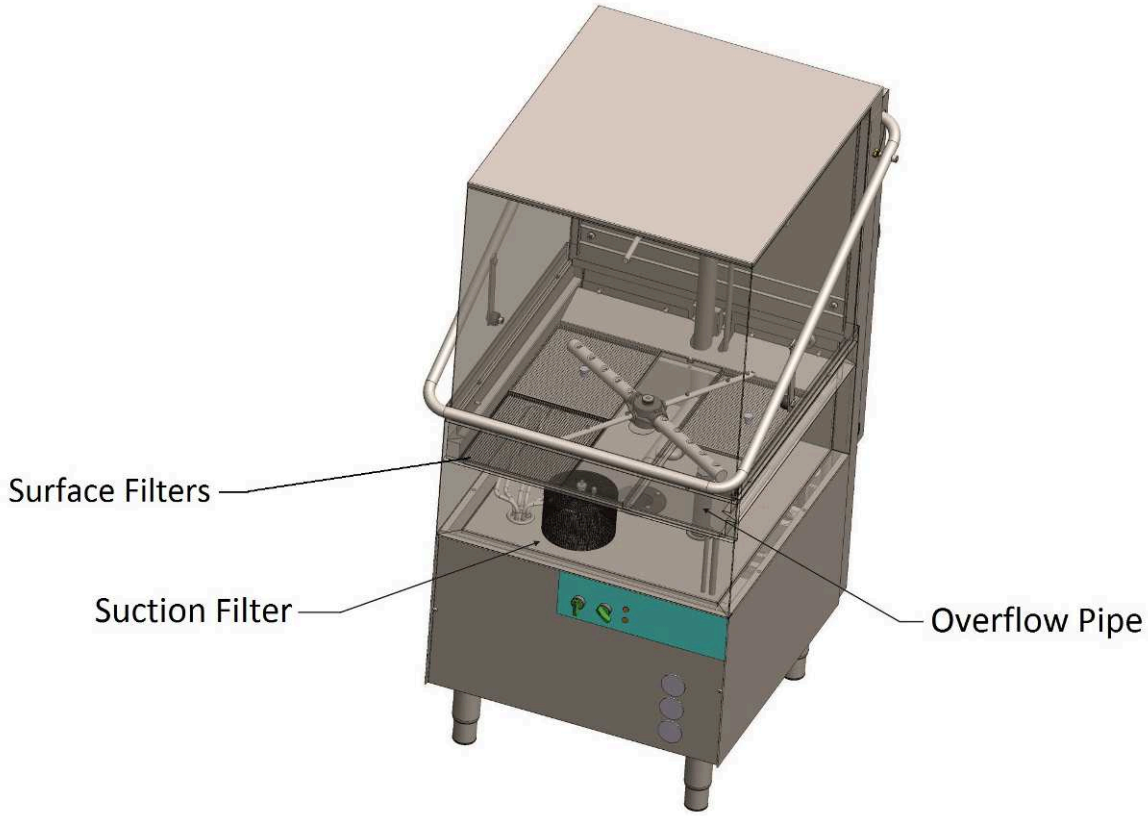

Operation

DAILY OPERATION

- Check the chemical containers to be sufficient full.
- Reposition the overflow pipe and the surface screeners.
- Turn on the dishwasher by pressing button SW6 for 3 sec. The LED L6 will flash and the buzzer will sound.
- Wait the tank to fill up with water and chemical pumps to prime. During priming the indication “FILL” will keep appear on the two 7 segment screens.

IMPORTANT NOTE

The heating elements start warming only when filling is finished. On the screens LCD1 & LCD2 the current temperature of each tank is displayed alternately (when LCD 1 shows “bt” then LCD 2 displays boiler’s temperature, when LCD 1 shows “tt”, then LCD 2 displays tank temperature). In case that the wash tank’s heating resistance is ON, a dot in the right lower corner of LCD1 is lit, while in case that the boiler’s heating resistance is ON a dot in the right lower corner of LCD2 is lit. For that reason, symbol (representing the tank) is shown beneath of LCD1 & symbol (representing the boiler) is shown beneath of LCD2.

Operation

- Wait 20 minutes in order both the tank and booster to be fully heated.

IMPORTANT NOTE

During the first full warming at the start of the swift the washing cycle does not start until the dishwasher to be fully warmed

CAUTION

The full heating process is finished when both booster and tank temperatures are minimum 74°C.

- Load the basket in a proper way and place it inside the machine.

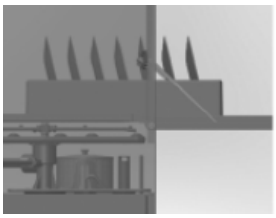

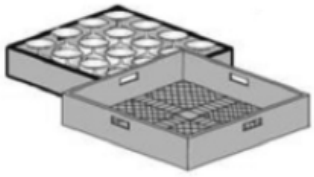

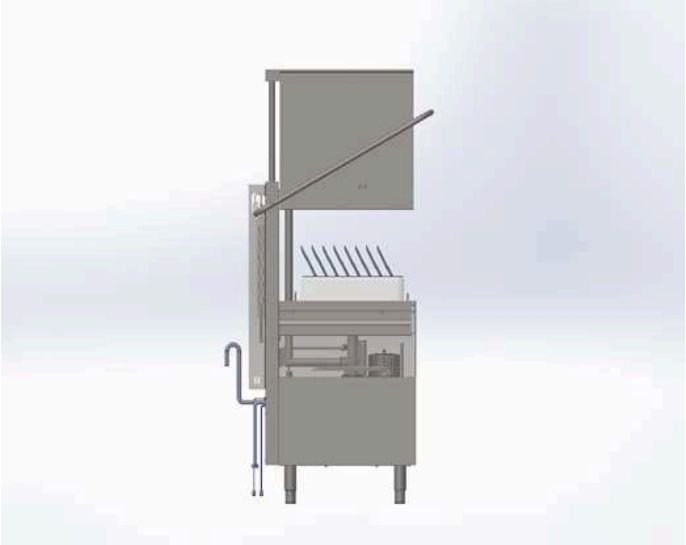

CAUTION

All the residuals on the dishes and glasses must be removed

- Close the door
- Start a washing cycle by pressing the preferable washing cycle time button

Program	Wash time	Rinse time
Short (SW1)	103 sec.	16 sec.
Standard (SW2)	163 sec.	16 sec.
Long (SW3)	223 sec.	16 sec.

IMPORTANT NOTE

If for any reason the door open the washing cycle is stopped and must start all over again.

DETERGENT AND RINSE AID PUMP OPERATION

Operation

This machine is equipped with peristaltic pumps for the rinse aid and the detergent filling. The filling inlets for each one are the two corresponding hoses which should be immersed in the appropriate tanks.

The dosing procedure is performed in two stages. Firstly during the initial filling (when you turn the machine on) and additional after each washing cycle:

- 1st Stage: During automatic preparation (before the first wash) the machine receives from the tank soap for 180 sec and rinse aid for 35 sec. This could be adjusted from the user through the User Menu *Check Section “User Menu”.
- 2nd Stage: During every complete washing & rinsing cycle, the machine receives detergent for 13 sec and rinse aid for 12 sec. This could be adjusted from the user through the User Menu *Check Section “User Menu”.

- When “END” appears on the 2 7 segment screens the washing cycle has finished and you can remove the basket.
- Allow the dishes and glasses to dry out of the dishwasher.

The dishwasher is equipped with thermo-protector so the rinsing does not start unless the rinse temperature to be 165°F / 74°C. In this case washing cycle time may be extended until the final rinse temperature to reach 165°F / 74°C.

CAUTION

Pay attention on removing the basket after the washing cycle as it may be HOT.

IMPORTANT NOTE

- For best results avoid allowing food residues to dry.
- Remove bulk food residues, olive pips, lemon peels, toothpicks, etc., before placing the dishes in the basket.
- If washing is delayed we recommend that you soak dishes and/or glasses which have food residues.

If, after washing, there are stains from dirt or water spots, the cause may be one of the following:

- Wrong ratio of detergent to water.
- Rinsing water with very high mineral content.
- Improper quantity of rinse-aid.
- Wrong arrangement of items in the basket.
- Low water pressure during rinsing.
- Low water temperature during washing.
- Clogged or miss-positioned filters.
- Clogged jets.

SHUTTING DOWN AND DRAINING

- Remove the overflow pipe.
- Press the draining button SW 4 in order to start draining process.

Attention: Do not remove the surface screeners and internal filters if the tank is not empty.

Operation

- When draining cycle is finished the dishwasher turns off automatically.

IMPORTANT NOTE

- The draining process includes also self cleaning so during draining hot water from the booster will be sprayed inside the tank in order residuals to be removed.
- Draining time can be adjusted (more or less) by entering the general settings of the machine.
- Remove the surface filters and clean them under running water.
- Remove the suction filter and the draining filter and clean them under running water.
- Reposition the filters and overflow pipe.

CAUTION

DO NOT use any metal sponge to scratch the filters or the dishwasher surface.

Maintenance

Proper operation and safe use may be ensured only through the correct use of the appliance, as well as the compliance with the operation instructions, the corresponding specifications and the care and cleaning indications.

Depending on local water hardness, the nozzles on the upper wash piping and rinse arms should be cleaned. Caution must be exercised to not damage the nozzles. If rinse nozzles are removed, they must be replaced with the slot in line with the rinse arm.

CAUTION

ATTENTION MUST BE GIVEN TO THE CORRECT INSTALLATION OF FILTERS, WASH ARMS, AND TEFLON BUSHINGS! REPLACE BUSHINGS IF WORN.

Clean the appliance with warm water and conventional cleaning aids. Stainless steel parts should never be cleaned them with “steel wool” wire brush, etc, since even the lightest contacts on the surfaces with steel may contaminate the stainless steel and cause rust formation. Use brushes made of polymer plastic or natural bristles or thin brass wire. Always keep brush movements in line with grain in the Stainless Steel so that you will not affect the appearance. Finally, rinse with clean water and dry thoroughly.

We remind you that corrosion (rust formation) on stainless steel surfaces is not created by itself, but rather due to the use of improper cleaning products (e.g. whitening or particularly caustic cleaning products based on chlorine).

Occasionally calcium sediments form on the internal walls of the wash compartment, tubing, and booster chamber (due to mineral particles in the water), which may affect the correct operation of the appliance and which requires removal.

USER'S MENU

IMPORTANT NOTE

1. User's menu has two levels of parameterization. In order to enter the second level please advice distributor's after sales department.
2. For setting the default parameters at any time please advice distributor's after sales department.

In order to enter the User's Menu, shut down the machine and press hold Buttons SW1, SW3 & SW6 at the same time for 3 sec with the hood closed. LED L6 flashes and a beeper sounds three times. Message "conf" appears for a few seconds and the User's Menu is activated.

Find the parameter that you wish to adjust using Buttons SW3 and SW4 for navigation inside the menu. The corresponding parameter will be displayed on the screen.

Should you wish to increase the amount (+), press Button SW1.

Should you wish to decrease the amount (-), press Button SW2.

After defining the value, press Button SW5 once in order to register the value in the memory.

In the matrix that is presented below you can find a short description of the functions that can be adjusted by the user, as well as their default values.

In order to exit the User's Menu, press-hold Button SW6 for 3 sec. The beeper sounds three times and message "OFF" appears on screens.

After closing the User's Menu, the machine is shut down.

Parameter	Minimum Value	Maximum Value	Default Setting	Scale	Parameterization Level
Scale Of Temperature	C	F	C	C	1&2
Booster Temperature	30	92	82	bt	1&2
Tank Temperature	30	70	60	tt	1&2
Filling With Water Time Delay	0(Disabled)	1(Enabled)	1(Enabled)	Eh	2
Washing time	0	-5	-5	Gr	2
Detergent Time Delay During Each Cycle	300"	900"	360"	Ft	2
Rinse Aid Time Delay During First Filling	0"	300"	120"	dF	1&2
Rinse Aid Time Delay During Each Cycle	0"	30"	13"	dC	1&2

Maintenance

Additional Rinsing	0"	90"	54"	rF	1&2
Duration Of Additional Rinsing	0"	30"	35"	rC	1&2
Time Delay Of Draining During Each Cycle	0(Disabled)	1(Enabled)	1(Enabled)	Cr	1&2
Time Delay Of Final Draining	5"	20"	12"	Ct	2
Duration Of Self Cleaning	20"	60"	25"	Cd	2
Washing Pump Soft Start	30"	300"	120"	Fd	2
Eco Function	30"	45"	20"	SC	2
Gentle pump start	0(Disabled)	1(Enabled)	0(Disabled)	SS	2
ECO function	0(Disabled)	1(Enabled)	0(Disabled)	EF	2

Troubleshooting

ALARMS

If the system records any malfunction, then a warning message will be displayed on the screen. If such a condition occurs, please advise the following table which describes the problem shortly. Should you need further assistance, don't hesitate to contact your local reseller.

ALARM	PROBLEM DESCRIPTION
Alarm 1	Filling time in excess.
Alarm 2	The water level during draining is not reduced.
Alarm 3	Excess time of boiler heating.
Alarm 4	Excess time of tank heating.
Alarm 5	Water temperature in the boiler is above limits.
Alarm 6	Water temperature in the wash tank is above limits.
Alarm 8	Tank's thermometer is not connected.
Alarm 7	If the unit is not running on the heating cycle for at least 1hr 30min.
Alarm 9	Tank's thermometer is damaged.
Alarm 10	Boiler's thermometer is not connected.
Alarm 11	Boiler's thermometer is damaged.

Troubleshooting

Alarm 12	The washing cycle is terminated, but the boiler was not heated properly (excess heating time in Thermo-protector function).

TROUBLESHOOTING

PROBLEM	CAUSE	REMEDY
The dishwasher does not operate properly.	Connection interruption.	Check the connection.
	You have not turned the switch of the appliance ON.	Turn the switch ON.
	Main switch / or fuse has not been activated / or it is faulty.	Check the main switch / or fuse.
	The switch of the appliance is faulty.	Refer to the authorized local dealer who sold the appliance or directly to the manufacturer.
	The water inlet valve is faulty.	
	The door is not closed.	Close the door.
	You have not turned the water supply on.	Turn the supply on.
The appliance operates, but the switch LED does not light on.	The LED is faulty.	Change the LED.
Boiler heating does not operate.	Switch or main switch or fuse has not been activated.	Check the switch of the appliance and the main switch or fuse.
	The safety thermostat of the boiler is faulty.	Refer to the authorized local dealer or the manufacturer.
	The 93°C thermal fuse of the boiler is faulty.	
	Pressure regulator is faulty.	
	“Boiler heating” relay is faulty.	
	Boiler fuse is burned out.	
Boiler heating operates, but LED does not turn on.	Faulty LED.	Change LED.
Dispenser heating does not operate.	Switch N1 of the appliance or main switch or fuse has not been activated.	Activate the corresponding switch or fuse.
	Boiler heating is open.	Wait.
The 85°C thermal fuse is faulty. The dispenser’s fuse is burned out.	The thermostat switch of 60°C heating is faulty.	Refer to the authorized local dealer or the manufacturer.
	“Compartment heating” relay is faulty.	

Troubleshooting

Dispenser's heating operates, but LED does not turn on.	Faulty LED.	Change LED.
Pump motor does not operate.	Main switch or fuse is not activated. The door is not closed.	Activate the main switch or fuse. Close the door.
	Main relay is faulty.	Refer to the authorized local dealer or the manufacturer.
	Pump motor is faulty.	
	Program selection switch is faulty.	
Motor operates, but pump does not rotate.	An object has jammed the pump fin.	Refer to the authorized local dealer or the manufacturer.
	Salts or detergent have been petrified following non-operation of the appliance.	Rotate the screw on the backside of the motor, until it rotates freely.
Items do not dry (dishes, glasses, etc.).	Compartment has no drying aid.	Insert drying aid to the compartment.
	Drying valve is faulty.	Refer to the authorized local dealer or the manufacturer.
	Program switch is faulty.	
	Rinsing arms do not rotate.	
	Basket does not rotate.	
Display shows Sb ht.	The booster temperature is high enough.	Adjust the booster temperature.

Parts Breakdown

Model CD-GR-1500 46797

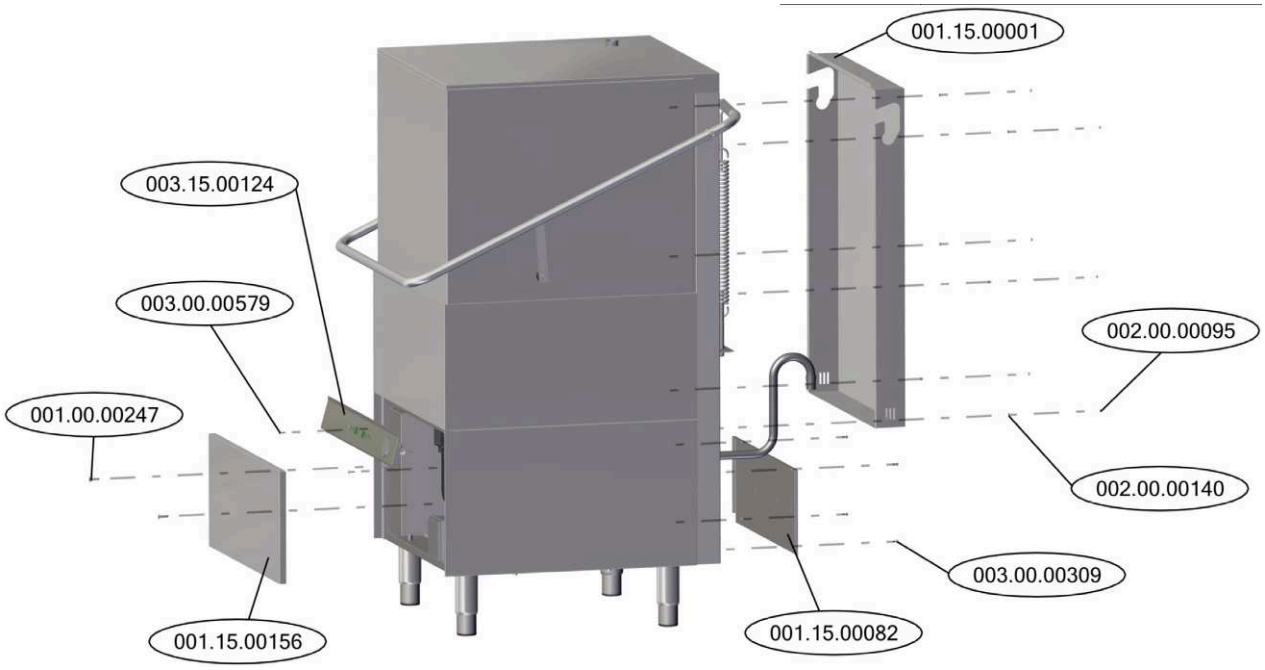

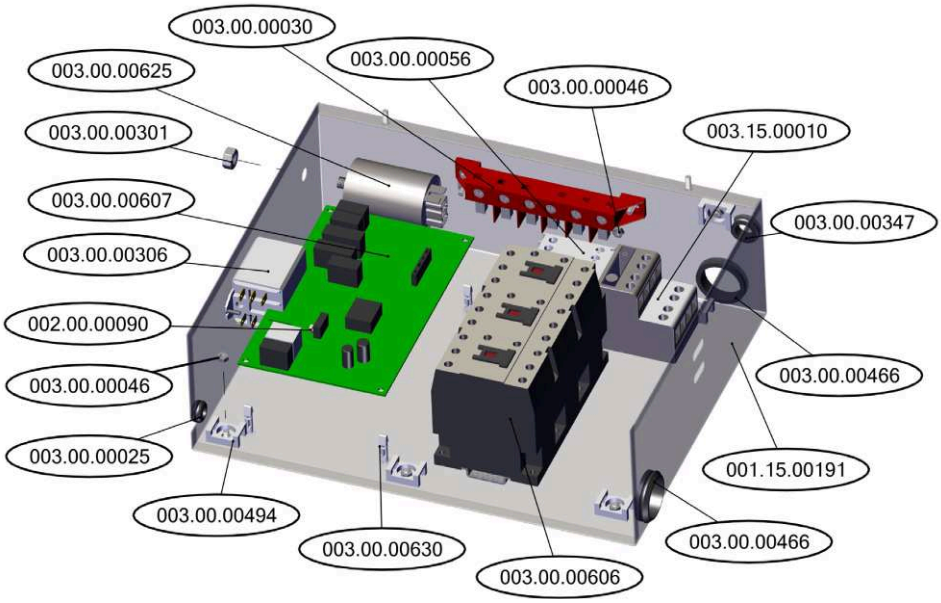

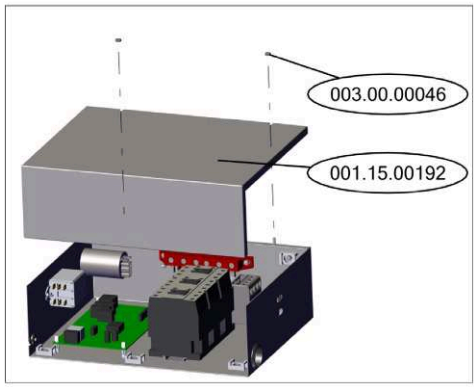

Parts Breakdown

Model CD-GR-1500 46797

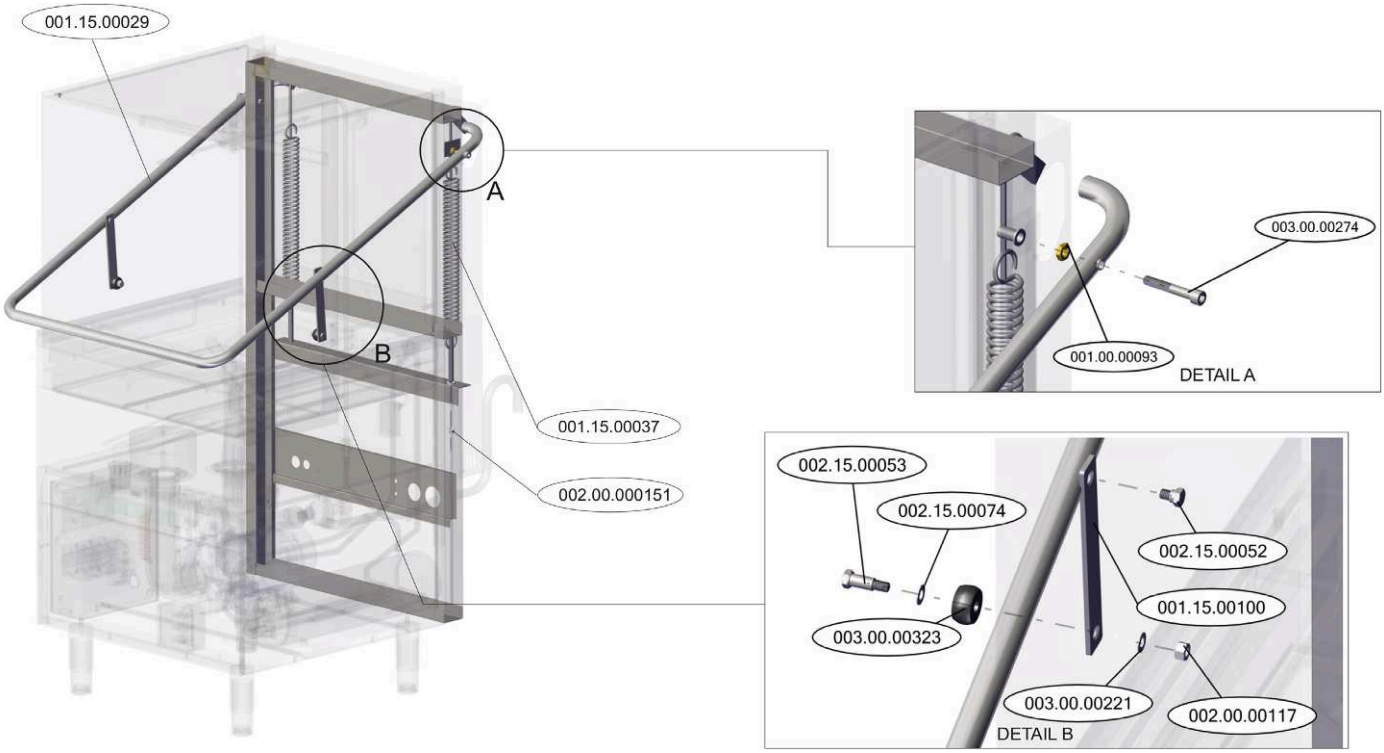

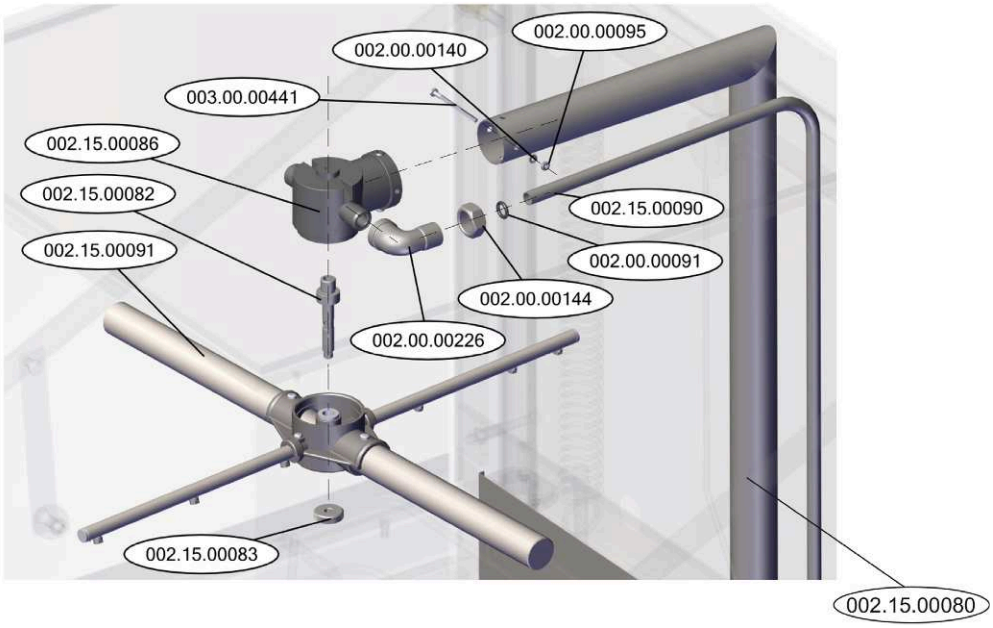

Parts Breakdown

Model CD-GR-1500 46797

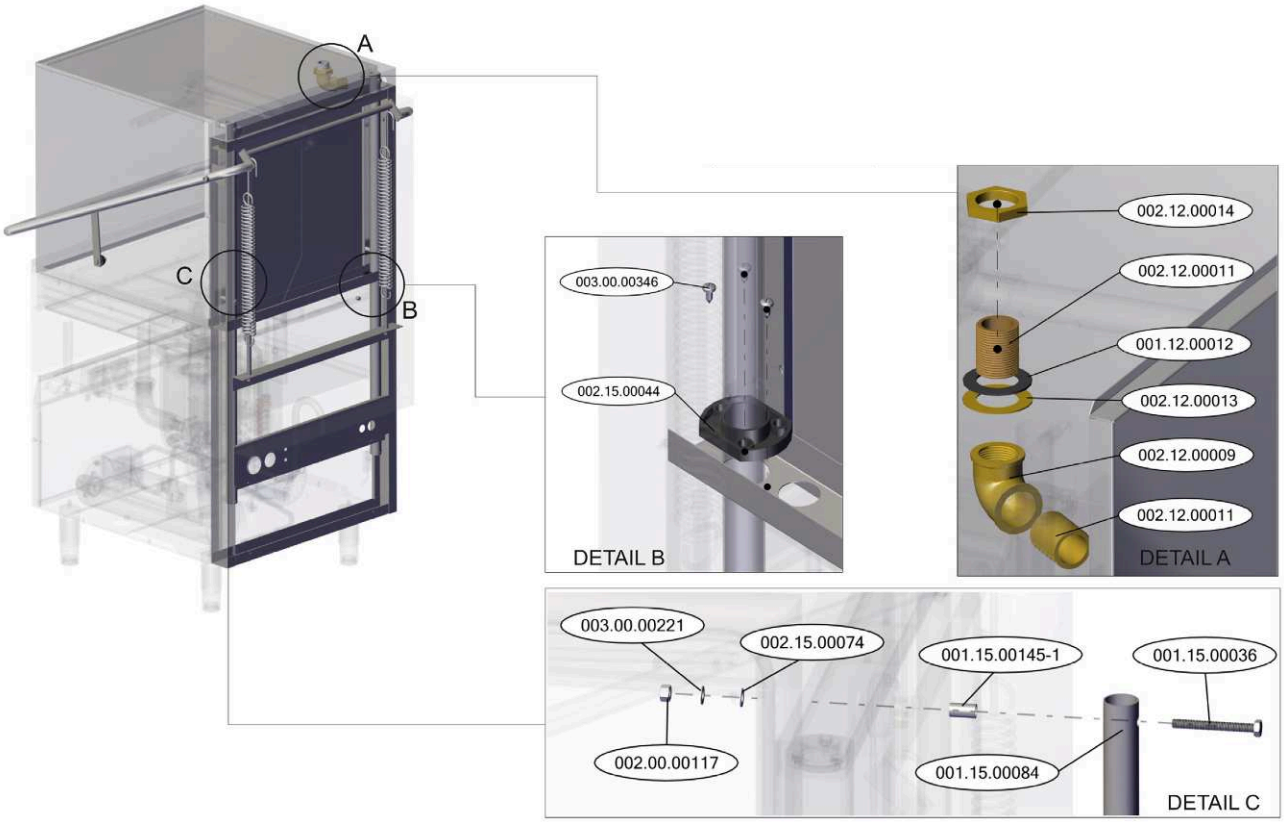

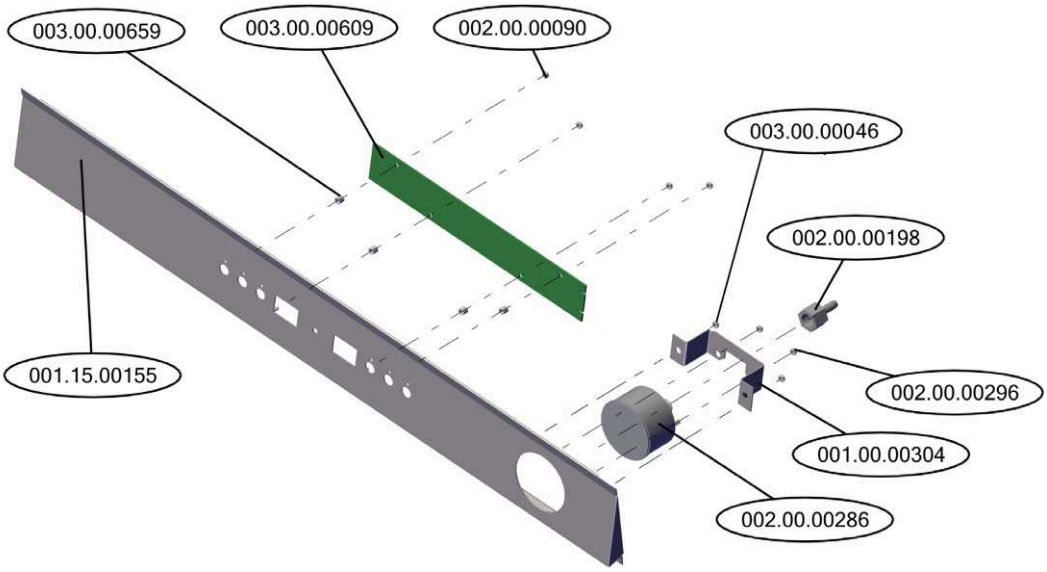

Parts Breakdown

Model CD-GR-1500 46797

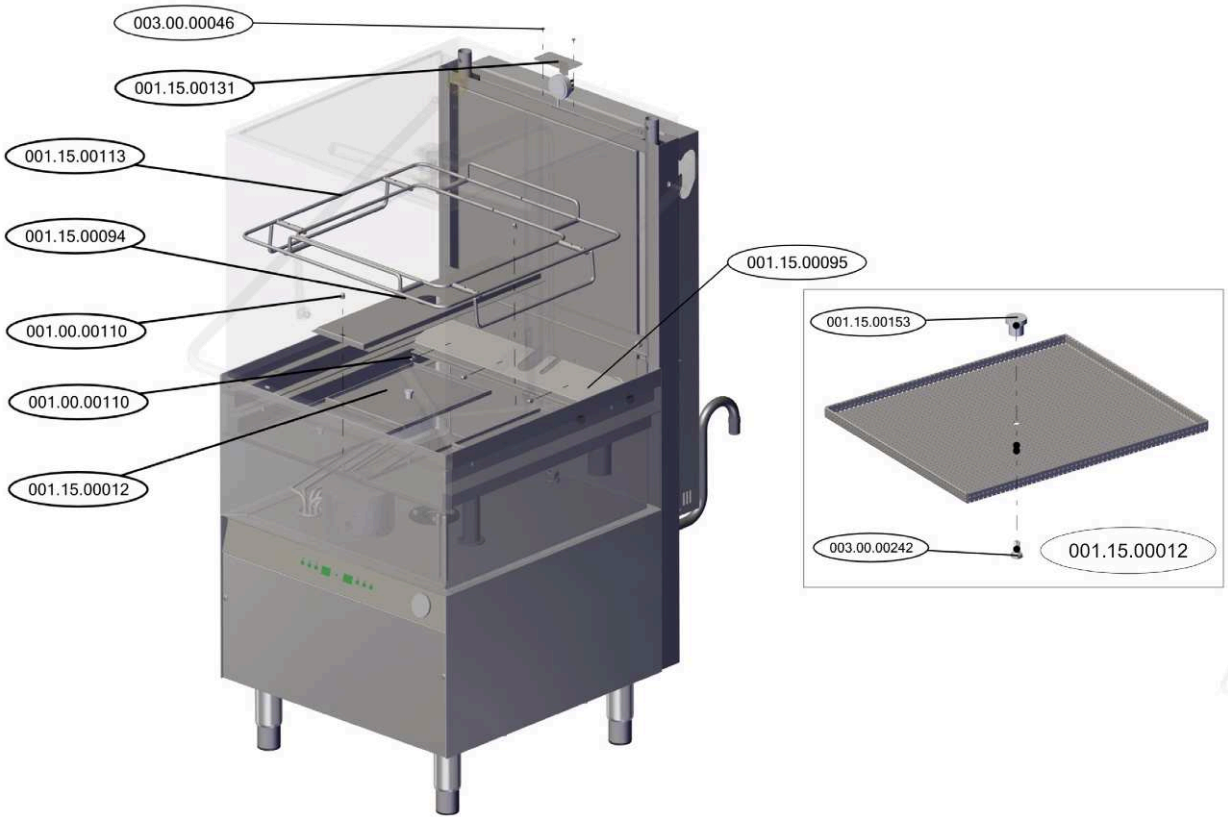

Parts Breakdown

Model CD-GR-1500 46797

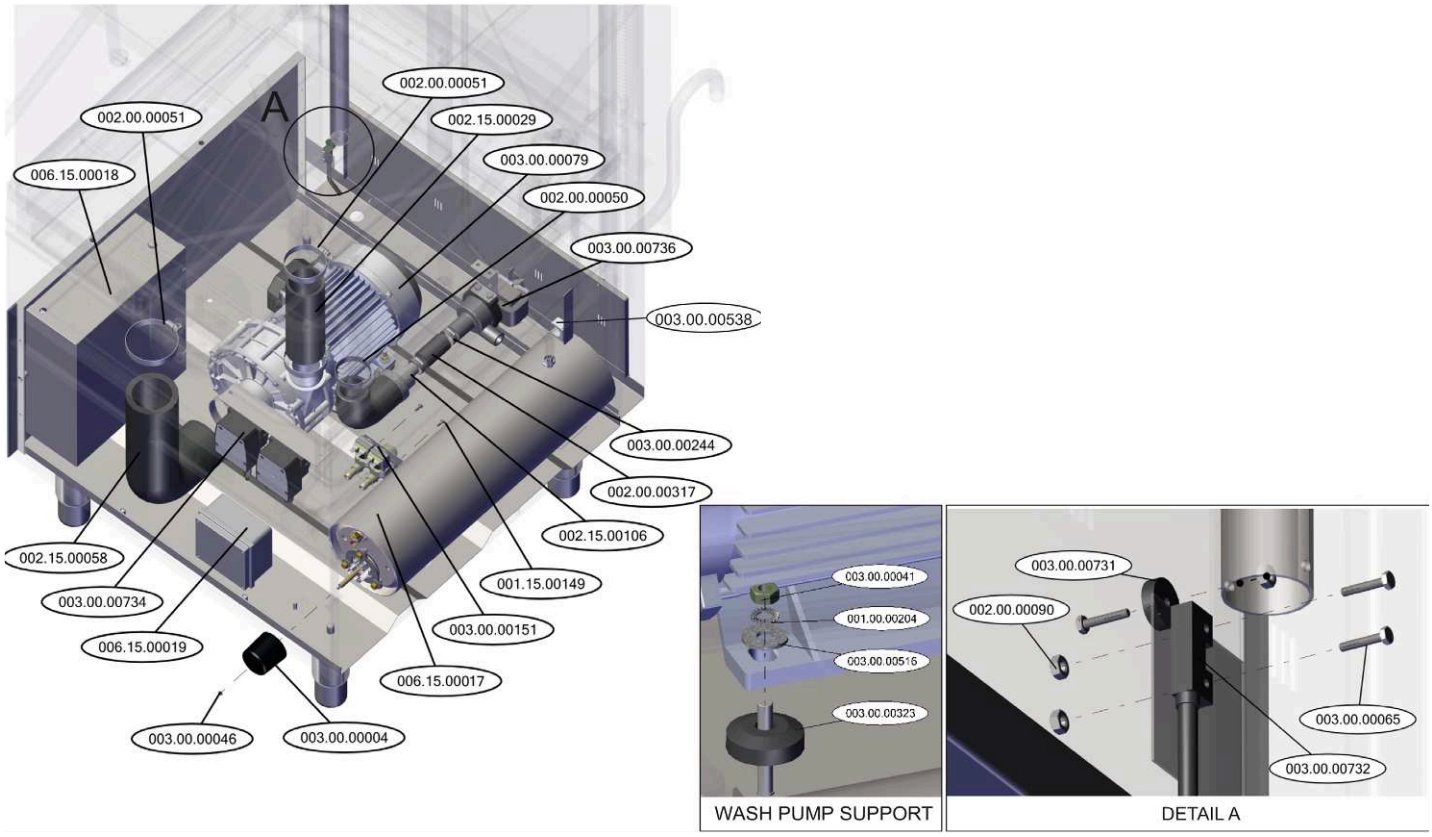

Parts Breakdown

Model CD-GR-1500 46797

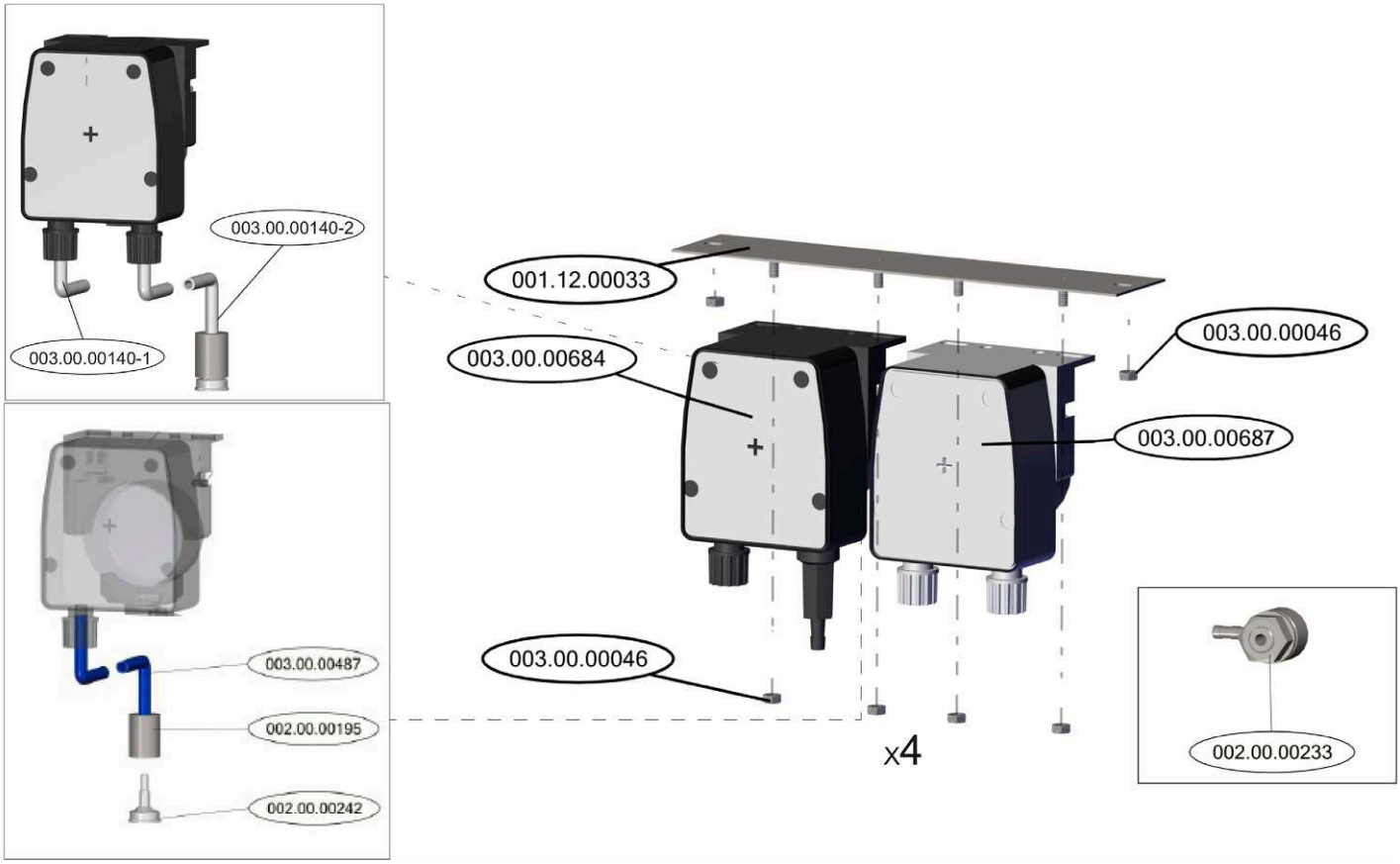

Parts Breakdown

Model CD-GR-1500 46797

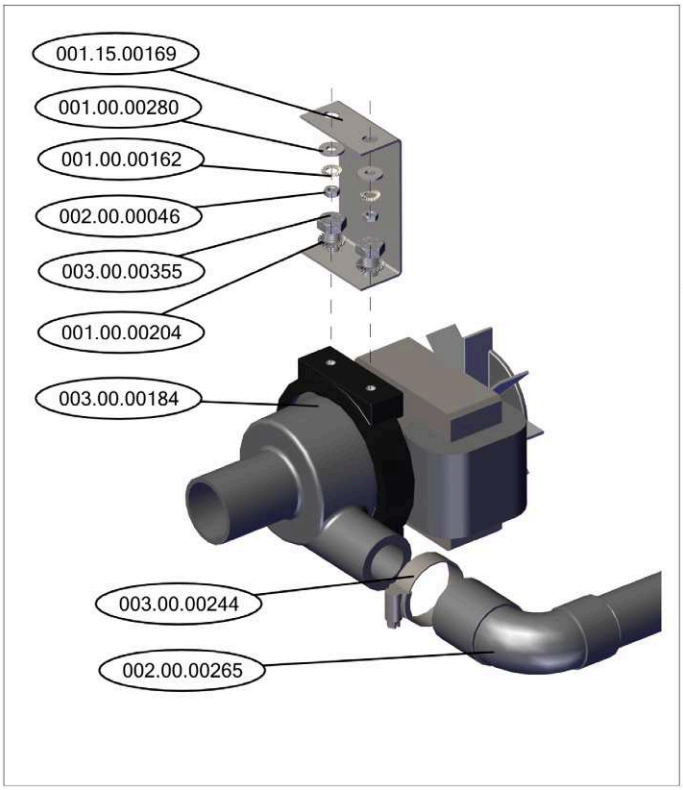

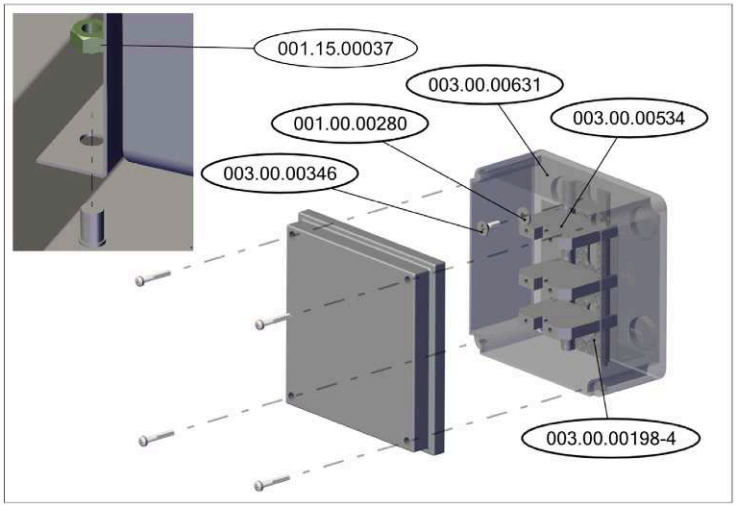

Parts Breakdown

Model CD-GR-1500 46797

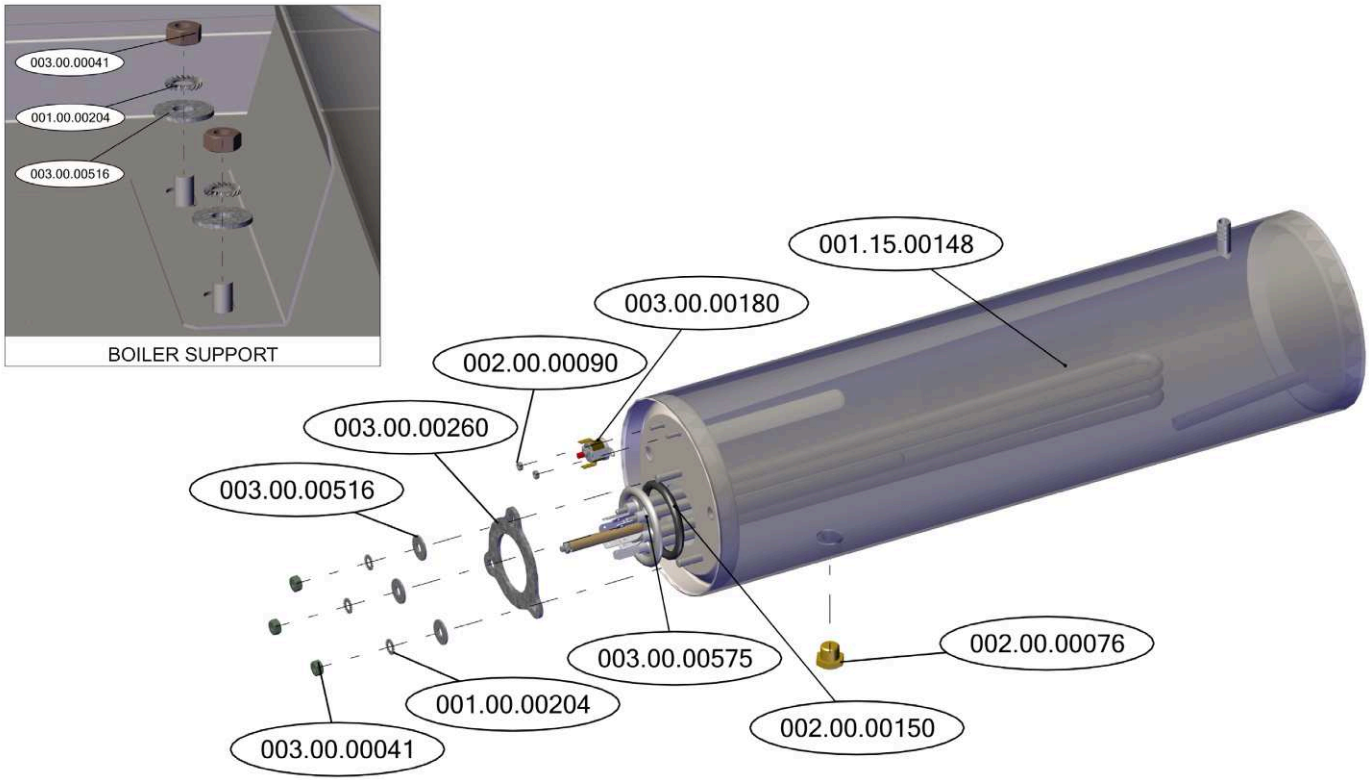

Parts Breakdown

Model CD-GR-1500 46797

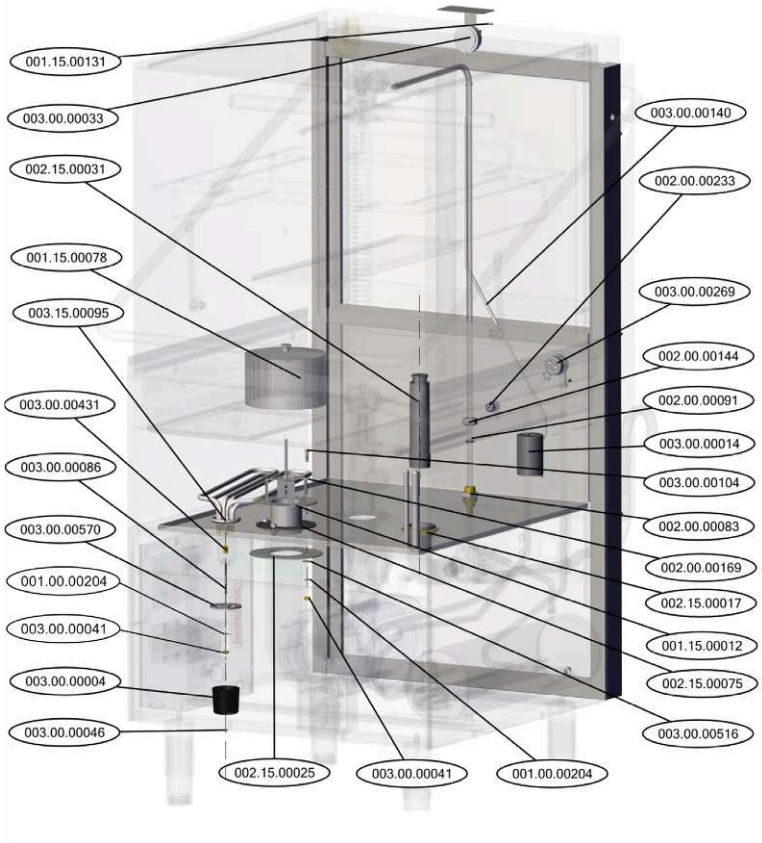

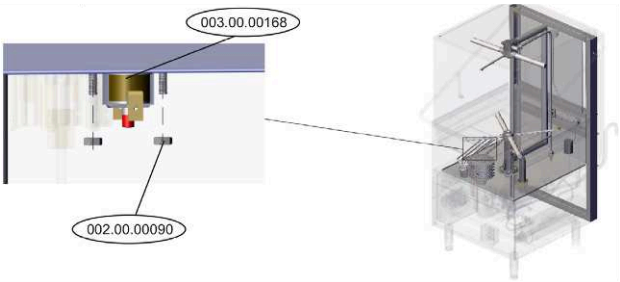

Parts Breakdown

Model CD-GR-1500 46797

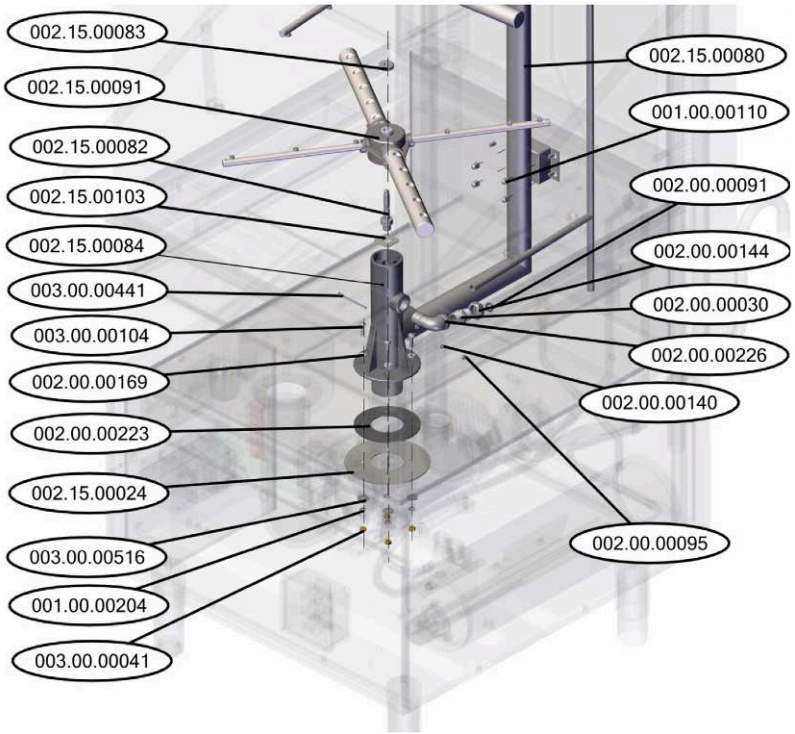

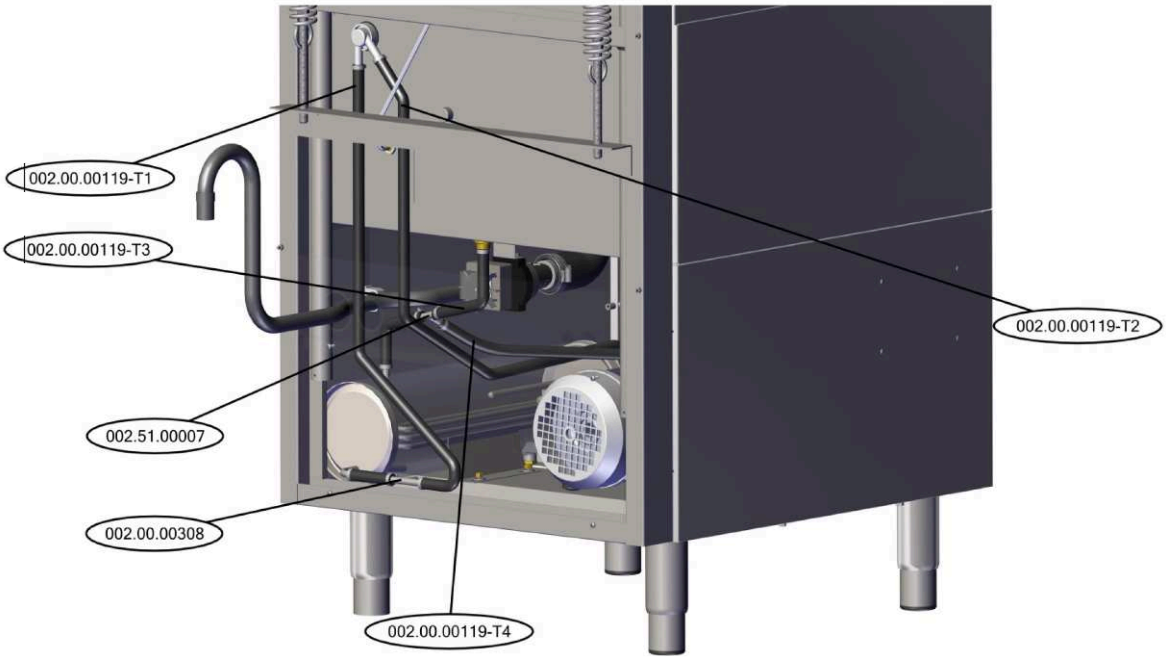

Parts Breakdown

Model CD-GR-1500 46797

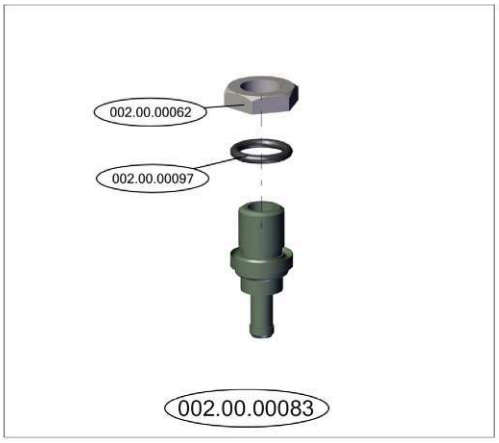

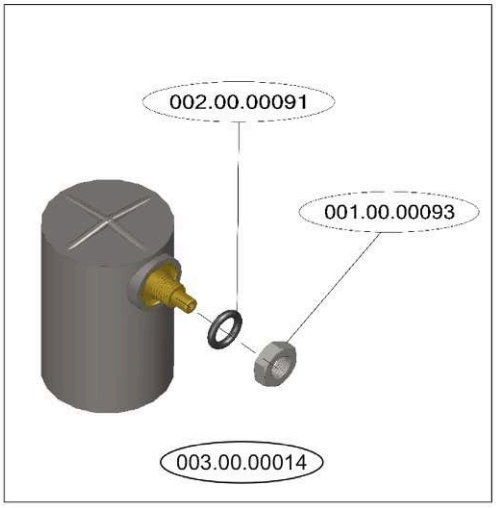

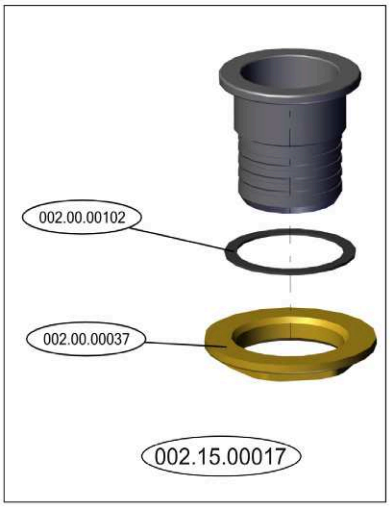

Parts Breakdown

Model CD-GR-1500 46797

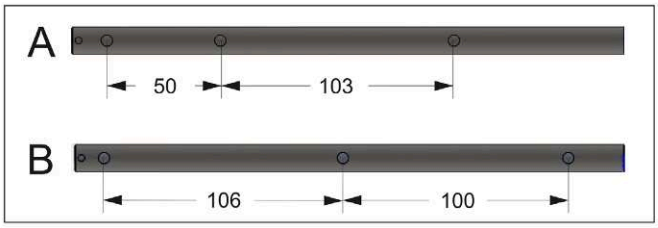

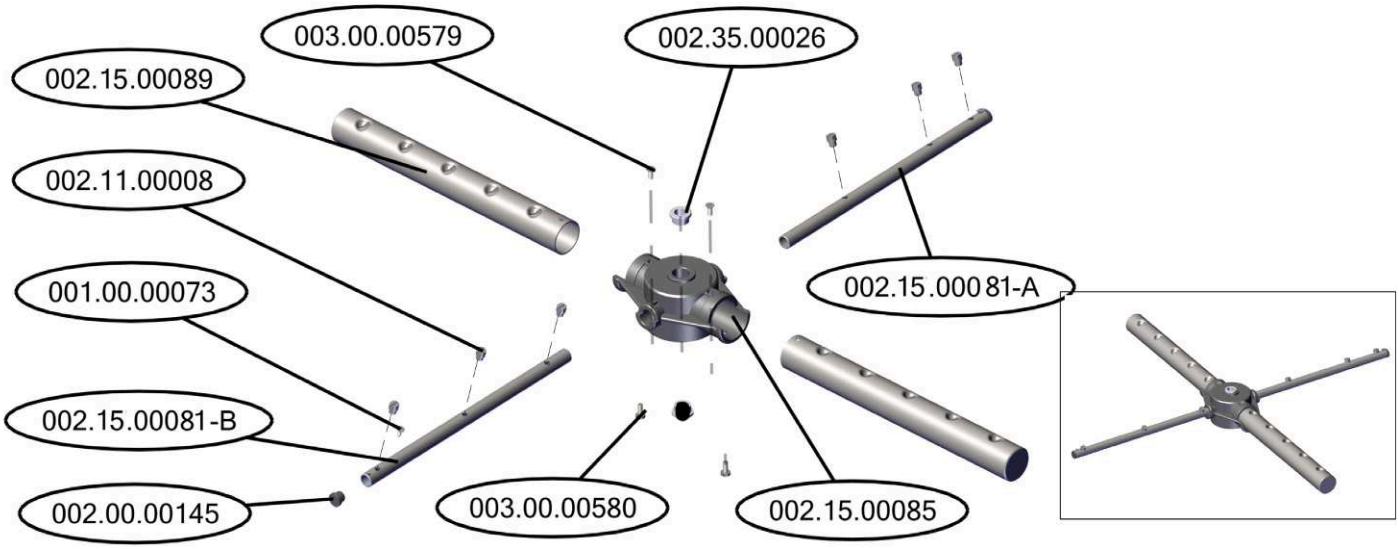

Parts Breakdown

Model CD-GR-1500 46797

002.00.00109

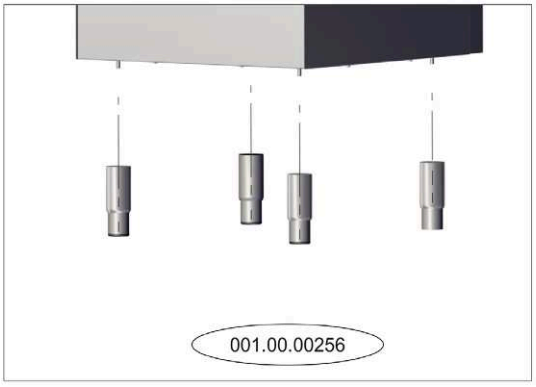

001.00.00256

002.00.00307

003.00.00166

003.00.00439

003.00.00390

Parts Breakdown

Model CD-GR-1500 46797

Item No.	Description	Position
73794	Filter Retaining Nut for 46797	001.00.00017
73825	Inox Screw 2.9x10 for 46797	001.00.00073
73833	M10 Nut DIN 439 Inox for 46797	001.00.00093
73774	Domed Cap Nut M6 for 46797	001.00.00110
AE405	Lock Washer D4 for 46797	001.00.00162
73800	Galvanized Lock Washer 6.4x11x0.7 for 46797	001.00.00204
61020	Front Cover Screw Inox M6x25 for 46797	001.00.00247
61024	Leveling Feet 1 3/4" 304 145/210 M10x25 for 46797	001.00.00256
AD882	Washer 4x10 for 46797	001.00.00280
AE406	Bracket for Pressure Gauge 1510 for 46797	001.00.00304
AD884	Bracket for Peristaltic Pumps Model 1200 for 46797	001.12.00033
73752	Back Cover 1500 for 46797	001.15.00001
73793	Filter Element for 46797	001.15.00012
73776	Door Handle 1500 for 46797	001.15.00029
73812	Inox Bolt M8x70 for 46797	001.15.00036
41122	Door Spring Turbo for 46797	001.15.00037
73853	Pump Filter Turbo 1500 for 46797	001.15.00078
73832	Lower Back Cover 1500 for 46797	001.15.00082
73805	Hood Support Pipe 30x1100 for 46797	001.15.00084
73864	Support for Filter Mid for 46797	001.15.00094
73863	Support for Filter Back for 46797	001.15.00095
73779	Door Handle to Hood Connector for 46797	001.15.00100
61046	Basket Support 1500 for 46797	001.15.00113
73865	Support Plate for Pressostat for 46797	001.15.00131
AE407	Spacer D12/10x23 for 46797	001.15.00145-1
61036	Boiler Turbo for 46797	001.15.00148
61044	Inox Knob for Square Tank Filter 1500-600 for 46797	001.15.00153
AE408	Control Panel - Steel Base for 46797	001.15.00155
AE409	Front Cover for 46797	001.15.00156
AE410	Inox Base for Draining Pump for 46797	001.15.00169
AE411	Plastic Handle Spacer for 46797	001.15.00182
AE412	Electrical Components Panel for 46797	001.15.00191

Item No.	Description	Position
AE413	Electrical Components Box Cover for 46797	001.15.00192
41137	Inox Niple 1/2" for 46797	002.00.00030
73780	Drain and Overflow Base Nut 1 1/2 for 46797	002.00.00037
AE414	Nut M4 Galvanised for 46797	002.00.00046
73766	Clamp 40-60 for 46797	002.00.00050
73768	Clamp 60-80 for 46797	002.00.00051
61019	Clamp 10-16 for 46797	002.00.00052
73841	Nut 1/2 for 46797	002.00.00062
73856	Rinse Base TUR - KN for 46797	002.00.00083
73821	Inox Nut M3 for 46797	002.00.00090
41140	O Ring 10.5x3 for 46797	002.00.00091
60952	Inox Nut M4 for 46797	002.00.00095
73749	O-Ring 20x4 for 46797	002.00.00097
AE415	O-Ring 48x4 for 46797	002.00.00102
64817	Inlet Hose 1500mm 10x14.5 Hot Water Straight/Elbow with Gasket for 46797	002.00.00109
73822	Inox Nut M8 for 46797	002.00.00117
AE416	Hose Black (3/8) 10x16.5 L: 780mm Boiler - DVGW Valve for 46797	002.00.00119-T1
AE417	Hose Black (3/8) 10x16.5 L: 1110mm Water Valve - DVGW Valve for 46797	002.00.00119-T2
AE418	Hose Black (3/8) 10x16.5 L: 360mm Boiler - Machine Tank for 46797	002.00.00119-T3
AE419	Hose Black (3/8) 10x16.5 L: 500mm Water Valve - T Connector D10-D10 for 46797	002.00.00119-T4
41106	Wash Pump Inlet Hose for 46797	002.00.00127
AE420	Hose Black (1/4) 6x12 L: 630mm T Connector D10-D6 - Rinse Pump (Hose not Visible) for 46797	002.00.00132-T1
AE421	Hose Black (1/4) 6x12 L: 560mm T Connector D10-D6 - Pressure Gauge (Hose not Visible) for 46797	002.00.00132-T2
73831	Lock Washer Inox 4 for 46797	002.00.00140
41139	Rinse Pipe Retaining Nut for 46797	002.00.00144
73763	Cap for Rinse Arm for 46797	002.00.00145
60978	O-Ring 45x6 for 46797	002.00.00150
AE422	Nut M10 Galvanised for 46797	002.00.00151
AD905	Lock Washer M4 for 46797	002.00.00162
73871	Teflon 12-6-2 for 46797	002.00.00169
61006	Balance F15x20 for 46797	002.00.00195
AD906	Fittings 1/4x7 Fem for 46797	002.00.00198

Item No.	Description	Position
73861	Rubber Gasket 109x54x3 for 46797	002.00.00223
41136	Inox Angle Male/Female 1/2" for 46797	002.00.00226
61018	Clamp 8-12 for 46797	002.00.00231
73773	Detergent Tank Injector for 46797	002.00.00233
61007	Filter Plastic for Rinse Aid Valve for 46797	002.00.00242
60376	Elbow Draining Pipe OD22-ID19mm 1.5 for 46797	002.00.00265
60981	Pressure Gauge 2" 0/60 PSI 1/4 NPT for 46797	002.00.00286
AE423	Nut M5 Galv for 46797	002.00.00296
65670	PRV Valve for 46797	002.00.00307
65669	T-Connection Boiler 10 - 6 for 46797	002.00.00308
AE424	Pressure Hose 20x30 for 46797	002.00.00317
41085	Sprayer for Rinsing Arm for 46797	002.11.00008
AE425	Angle F/F 1 D35 for 46797	002.12.00009
AE426	Thread Nipple 1 L35 for 46797	002.12.00011
AE427	Gasket 1 for 46797	002.12.00012
AE428	Washer D55x35 for 46797	002.12.00013
AE429	Nut 1 for 46797	002.12.00014
73755	Base for Tank Filter Turbo 150 for 46797	002.15.00012
41132	Drain and Overflow Base for 46797	002.15.00017
61040	Retaining Plate Turbo for 46797	002.15.00024
AE430	Retaining Plate for Filter for 46797	002.15.00025
73855	Pump Output Hose for 46797	002.15.00029
41131	Drain and Overflow Pipe for 46797	002.15.00031
73847	Plastic Guide D.30 for 46797	002.15.00044
73808	Inox Axle Bolt Short M8x17 for 46797	002.15.00052
73807	Inox Axle Bolt M8x35 Long for 46797	002.15.00053
73854	Pump Inlet Hose for 46797	002.15.00058
73872	Teflon Washer 16x8x1mm for 46797	002.15.00074
61048	Tank Filter Base Rubber Gasket Turbo for 46797	002.15.00075
73882	Wash Supply Inox Turbo for 46797	002.15.00080
AE431	Rinsing Arm A and B for 46797	002.15.00081-A-B
73806	Inox Axle 20 8 Turbo for 46797	002.15.00082

Parts Breakdown

Model CD-GR-1500 46797

Item No.	Description	Position
41124	Wash and Rinse Group Retaining Nut 25 7 8 for 46797	002.15.00083
41126	Wash and Rinse Base Lower Plastic for 46797	002.15.00084
41123	Rinsing and Washing Arms Cross Plastic for 46797	002.15.00085
41125	Wash and Rinse Base Upper Plastic for 46797	002.15.00086
73845	Pipes Turbo 1500 Inox 30x1x248 for 46797	002.15.00089
73858	Rinse Supply Inox Turbo for 46797	002.15.00090
61038	Wash and Rinse Cross Turbo Complete for 46797	002.15.00091
73795	Flow Control Disc for Base for 46797	002.15.00103
AE432	Reducing D40-25 for Drain Pump for 46797	002.15.00106
41127	Teflon 18x10 for 46797	002.35.00026
AD916	T-Connector D10-D10 for 46797	002.51.00007
73802	Heater Element Cover for 46797	003.00.00004
41091	Pressostat Chamber for 46797	003.00.00014
60968	Cable Rubber Protector for 46797	003.00.00025
41090	Pressostat Switch for 46797	003.00.00033
73843	Nut M6 Galvanised for 46797	003.00.00041
73834	M4 Nut Galvanized for 46797	003.00.00046
41119	Relay Magnetic Contactor for 46797	003.00.00056
60957	Galv. Nut M3 for 46797	003.00.00065
73852	Pump 1.5 HP 208-240V 6 2P UL for 46797	003.00.00079
73878	Threaded Shaft M4x60 for 46797	003.00.00086
73816	Inox Hex Bolt M6x20 for 46797	003.00.00104
60310	Detergent Inlet Tube 4x6mm (Transparent) for 46797	003.00.00140
AE433	Tubo Transparent 4x6 L: 2500mm for 46797	003.00.00140-1
AE434	Tubo Transparent 4x6 L: 1160mm for 46797	003.00.00140-2
AD925	Double Water Input Valve for 46797	003.00.00151
AD927	Plast Basket 50x50 for 46797	003.00.00166
41087	Tank Thermofuse 90C for 46797	003.00.00168

Item No.	Description	Position
41088	Boiler Thermofuse 105C for 46797	003.00.00180
41113	Tank Draining Pump/Motor 230V-65W for 46797	003.00.00184
AD928	Terminal Block Support for 46797	003.00.00198-4
60959	Tapping Screw 3.5x9.5 for 46797	003.00.00200
73883	Washer Inox 6x18 for 46797	003.00.00221
61045	Inox Hex Screw M6x12 for 46797	003.00.00242
AD929	Clamp 20-32 for 46797	003.00.00244
73758	Boiler Element Fitting Base for 46797	003.00.00260
73839	Non Return Valve (DVGW) for 46797	003.00.00269
73811	Inox Bolt M10x64 Allen for 46797	003.00.00274
60969	Galve. Bolt M4x10 for 46797	003.00.00278
AE435	Power Supply Board 6Con. for 46797	003.00.0030
AE436	Nut M8 Galv for 46797	003.00.00301
73838	Micro Relay 8 Pins Faston for 46797	003.00.00306
73829	Inox Tapping Screw 4.2x13 for 46797	003.00.00309
73772	Copler 8x31 for 46797	003.00.00323
73869	Tapping Screw 4.8x13 for 46797	003.00.00346
AE437	Rubber Cable Protection N.01 for 46797	003.00.00347
AD932	Hex Bolt M6x12 Galvanised for 46797	003.00.00355
AD933	Plastic Basket 500x000 for Glasses for 46797	003.00.00390
73803	Heating Element Nut 13mm M4-M6 for 46797	003.00.00431
AD934	Plastic Cutlery Quadrato for 46797	003.00.00439
73815	Inox Hex Bolt M4x60 for 46797	003.00.00441
60973	Pipe Rubber Protector for 46797	003.00.00466
60311	Rinse Aid Inlet Tube 4x6mm (Blue) for 46797	003.00.00487
73884	Washer Steel 6x18 for 46797	003.00.00516
41133	Terminal Block 16mm for 46797	003.00.00534
AE438	Plastic Grip D25 for 46797	003.00.00538

Item No.	Description	Position
73867	Tank Heating Element Retaining Bracket for 46797	003.00.00570
61037	Heater Element Boiler 1500 7.5kW for 46797	003.00.00575
73827	Inox Screw M4x10 for 46797	003.00.00579
73820	Inox Machine Screw M4x10 for 46797	003.00.00580
AE439	Inox Screw M3x10 for 46797	003.00.00581
AE440	Magnetic Contactor for 230TF 7.5kW for 46797	003.00.00606
AD935	Atlas Main Board Version for 46797	003.00.00607
AD936	User Interface 7 SEGM Display Version for 46797	003.00.00609
AD939	Electromagnetic Filter for 46797	003.00.00625
AD940	Spacer Plastic PCB RC-14 for 46797	003.00.00630
AD941	Box Plastic 100x100x70 for 46797	003.00.00631
AD942	PCU Spacer 3.4x6x5 for 46797	003.00.00659
AD943	Peristaltic Detergent Pump Seko for 46797	003.00.00684
AD944	Peristaltic Rinse-Aid Pump Seko 0.7lt Fixed Flow for 46797	003.00.00687
AD947	Magnetic Unit D17-4 for 46797	003.00.00731
AD948	Magnetic Sensor (UL Type) for 46797	003.00.00732
AD950	Detergent-Rinse Aid Pump Kit for 46797	003.00.00734
AE441	Tank Draining Pump Kit for 46797	003.00.00736
73876	Thermal Overload Relay 7.0-10.0 for 46797	003.15.00010
41128	Tank Heating Element C 1500 6Kw for 46797	003.15.00095
AE443	Film for LCD for 46797	003.15.00117
AE444	Control Panel Complete for 46797	003.15.00124
61034	Boiler 1500 400V Complete (1 Heating Elements) for 46797	006.15.00008
AE445	Boiler Complete for 46797	006.15.00017
AE446	Electrical Box (UL/ETL) for 46797	006.15.00018
AE447	Electrical Box for Power Supply for 46797	006.15.00019

Electrical Schematics

Model CD-GR-1500 46797

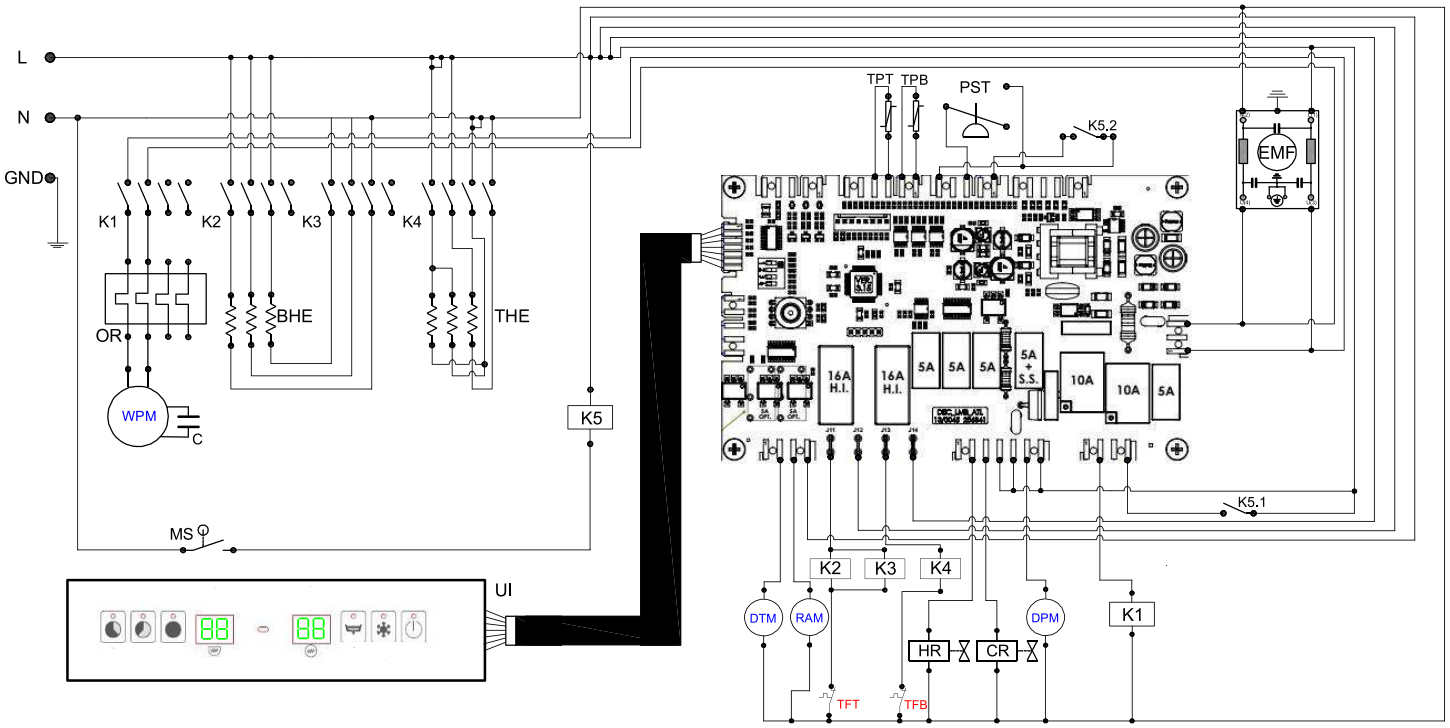

EMF : Electromagnetic filter
UI : Users interface
PS : Pressostat
TPB : Thermo Probe Booster
TPT : Thermo Probe Tank
DTM : Detergent Pump Motor

RAM : Rinse Aid Pump Motor
K1 : Pumps Magnetic Contactor
K2,K3 : Booster Magnetic Contactor
K4 : Tank Magnetic Contactor
K5 : Microrelay
K5.1,K5.2 : Microrelay Contacts

MS : Magnetic switch
TFB : ThermoFuse Booster
TFT : ThermoFuse Tank
BHE : Booster Heating element
THE : Tank Heating Element
HRV : Hot Rinse Valve

CRV : Cold Rinse Valve
DPM : Drain Pump Motor
WPM : Washing Pump Motor
C : Capacitor
OR : Overload Relay

Notes

INSTALLATION REQUIREMENTS AND CHECKLIST

The Dishwasher must be installed by a certified plumber.
Failing to follow the instructions below will void the warranty.

This checklist *must* be returned with warranty card.

Installer
Signature Below:

- [ ] 1. Check water hardness. If water hardness exceeds 7 grains per gallon, a water softener must be installed.
- [ ] 2. Ensure the correct placement and leveling of the machine as per the manual (page 10).
- [ ] 3. The water supply hose / pipe should be flushed before the final connection (page 12).
- [ ] 4. The dishwasher must be connected to a hot water source with a minimum temperature of 40°Celcius /104° Fahrenheit.
- [ ] 5. Adjust water pressure using the PRV to 20 PSI, while filling the machine with water.
- [ ] 6. Rinse and detergent containers can be adjusted at the bottom of the machine by rotating the adjustment screws on the pumps. Adjust rinse/detergent flow to manufacturers recommendations. 2.6 ml per rotation for DETERGENT – 1.2 ml per rotation for RINSE. ***Rinse/Detergent containers must be equal or lower in height than the pumps***
- [ ] 7. Do not add an extension to the drain hose, drain connections must be made in the same flow with the drain pipe. Do not install drain hose to exceed 26 inches / 65 cm above the ground (page 13).
- [ ] 8. If the tank temperature gauge is not inside the green zone, the installer must adjust to 80° Celsius / 176° Fahrenheit.
- [ ] 9. If the booster gauge is not inside the green zone, the installer must adjust to 80° Celsius / 176° Fahrenheit.
- [ ] 10. If no water filtration/softener system is used, descale every 4 weeks.

Please read through owner's manual completely for all instructions.

Company Name: _____

Company Phone Number: _____

Installed By: _____

Date Installed: _____

Signature of Installer: _____

Warranty Registration

Thank you for purchasing an Omcan product. To register your warranty for this product, complete the information below, tear off the card at the perforation and then send to the address specified below. You can also register online by visiting:

Merci d'avoir acheté un produit Omcan. Pour enregistrer votre garantie pour ce produit, complétez les informations ci-dessous, détachez la carte au niveau de la perforation, puis l'envoyer à l'adresse spécifié ci-dessous. Vous pouvez également vous inscrire en ligne en visitant:

Gracias por comprar un producto Omcan usted. Para registrar su garantía para este producto, complete la información a continuación, cortar la tarjeta en la perforación y luego enviarlo a la dirección indicada a continuación. También puede registrarse en línea en:

https://omcan.com/warranty-registration/

For mailing in Canada

Pour postale au Canada

Por correo en Canadá

OMCAN
PRODUCT WARRANTY REGISTRATION
3115 Pepper Mill Court,
Mississauga, Ontario
Canada, L5L 4X5

For mailing in the US

Pour diffusion aux États-Unis

Por correo en los EE.UU.

OMCAN
PRODUCT WARRANTY REGISTRATION
4450 Witmer Industrial Estates, Unit 4,
Niagara Falls, New York
USA, 14305

or email to: service@omcan.com

Purchaser's Information

Name: _____

Address: _____

City: _____ Province or State: _____ Postal or Zip: _____

Country: _____

Dealer from which Purchased: _____

Dealer City: _____ Dealer Province or State: _____

Invoice: _____

Company Name: _____

Telephone: _____

Email Address: _____

Type of Company:

☐ Restaurant ☐ Bakery ☐ Deli

☐ Butcher ☐ Supermarket ☐ Caterer

☐ Institution *(specify)*: _____

☐ Other *(specify)*: _____

Model Name: _____ Model Number: _____ Serial Number: _____

Machine Description: _____

Date of Purchase (MM/DD/YYYY): _____ Date of Installation (MM/DD/YYYY): _____

Would you like to extend the warranty? ☐ Yes ☐ No

Thank you for choosing Omcan | Merci d'avoir choisi Omcan | Gracias por elegir Omcan

Since 1951 Omcan has grown to become a leading distributor of equipment and supplies to the North American food service industry. Our success over these many years can be attributed to our commitment to strengthen and develop new and existing relationships with our valued customers and manufacturers. Today with partners in North America, Europe, Asia and South America, we continually work to improve and grow the company. We strive to offer customers exceptional value through our qualified local sales and service representatives who provide convenient access to over 6,500 globally sourced products.

Depuis 1951 Omcan a grandi pour devenir un des “leaders” de la distribution des équipements et matériel pour l’industrie des services alimentaires en Amérique du Nord. Notre succès au cours de ces nombreuses années peut être attribué à notre engagement à renforcer et à développer de nouvelles et existantes relations avec nos clients et les fabricants de valeur. Aujourd’hui avec des partenaires en Amérique du Nord, Europe, Asie et Amérique du Sud, nous travaillons continuellement à améliorer et développer l’entreprise. Nous nous efforçons d’offrir à nos clients une valeur exceptionnelle grâce à nos ventes locales qualifiées et des représentants de service qui offrent un accès facile à plus de 6500 produits provenant du monde entier.

Desde 1951 Omcan ha crecido hasta convertirse en un líder en la distribución de equipos y suministros de alimentos en América del Norte industria de servicios. Nuestro éxito en estos años se puede atribuir a nuestro compromiso de fortalecer y desarrollar nuevas relaciones existentes con nuestros valiosos clientes y fabricantes. Hoy con socios de América del Norte, Europa, Asia y América del Sur, que trabajan continuamente para mejorar y crecer la empresa. Nos esforzamos por ofrecer a nuestros clientes valor excepcional a través de nuestro local de ventas y representantes de los servicios que proporcionan un fácil acceso a más de 6,500 productos con origen a nivel mundial.