Parts Breakdown

Model DI-CN-0005 39482
Model DI-CN-0010 31840

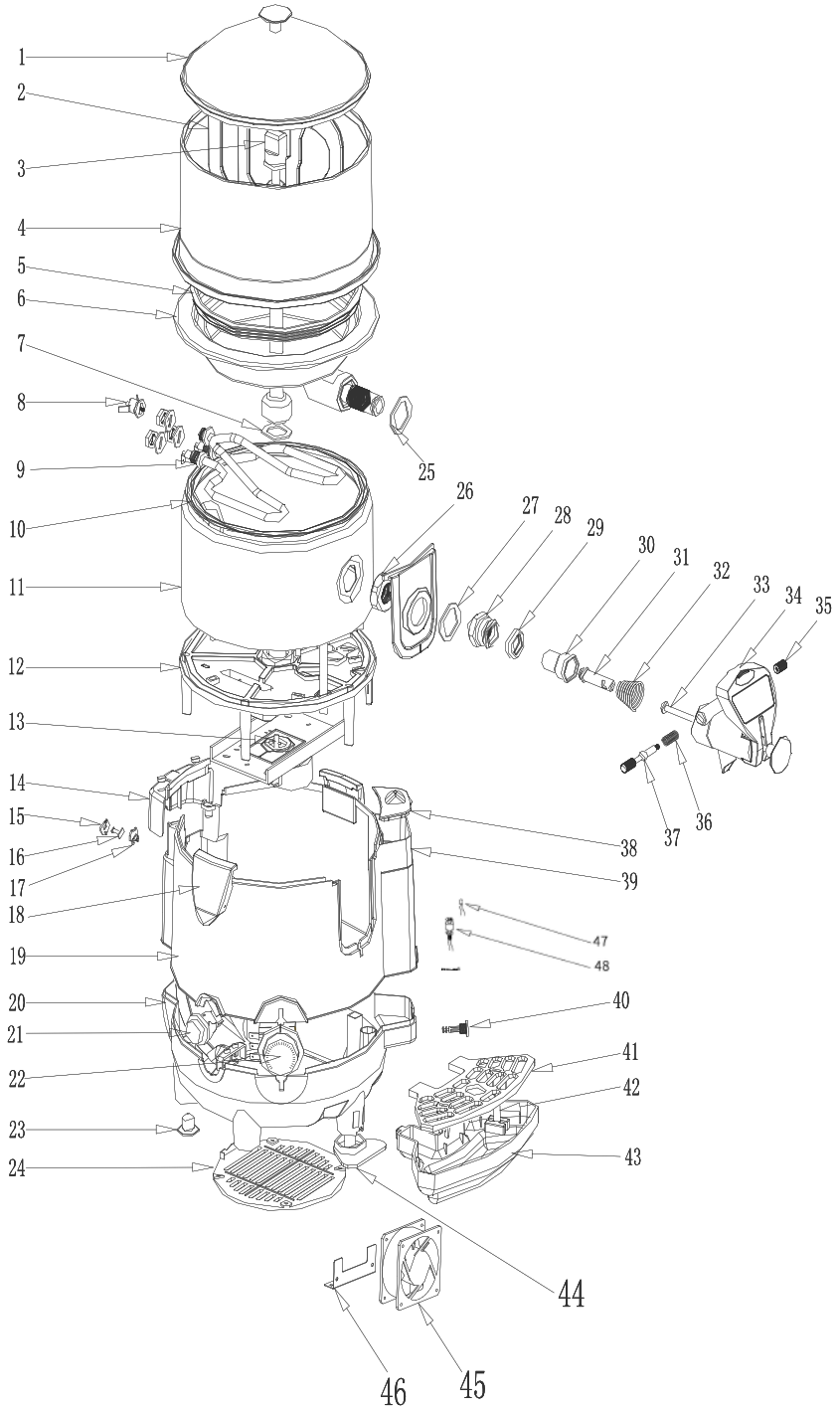

Parts Breakdown

Model DI-CN-0010 31840

Item No.	Description	Position
73902	Tank Cover for 31840	1-A
AP808	Knob of Tank Lid for 31840	1-B
73904	Paddle for 31840	2
AL383	Lid of Stirring Rod for 31840	3-A
73906	Stirring Rod for 31840	3-B
73907	PC Tank for 31840	4
73908	Gasket of PC Tank for 31840	5
73909	Stainless Steel Boiler (Upper Part) for 31840	6
73910	Gasket for 31840	7
AK773	Overheat Protector for 31840	8
AK774	Heater Element for 31840	9
73913	Boiler Gasket for 31840	10
AK776	Electrical Stainless Steel Boiler (Lower Part) for 31840	11
73915	Supporter for 31840	12
AK778	Motor for 31840	13
AK779	Back Cover for 31840	14
73918	Cover of Overheat Protector for 31840	15

Item No.	Description	Position
AK781	Button of Overheat Protector for 31840	16
73920	Button Stop of Protector for 31840	17
AK783	Tank Hinge for 31840	18
73922	Upper Exterior for 31840	19
73923	Lower Exterior for 31840	20
AK786	Power Switch for 31840	21
73925	Thermostat for 31840	22
73926	Foot for 31840	23
AK789	Ventilation Grill for 31840	24
73928	Washer of Faucet (Interior) for 31840	25
73929	Nut of Faucet (Interior) for 31840	26
76479	Gasket of Faucet for 31840	27
73931	Nut of Faucet Exterior for 31840	28
73932	Gasket of Faucet Screw for 31840	29
AK795	Gasket Inside the Faucet for 31840	30
73934	Moving Pin for 31840	31
73935	Faucet Spring for 31840	32

Item No.	Description	Position
73936	Cleaner Shaft for 31840	33
73937	Tap Handle for 31840	34
73938	Screw of Faucet for 31840	35
73939	Pin Spring for 31840	36
73940	Pin for 31840	37
73941	Lid of Water Bin for 31840	38
73942	Water Bin for 31840	39
73943	Drainage Plug for 31840	40
73944	Lid of Water Tray for 31840	41
27993	Float Indicator for 31840	42
73946	Water Tray for 31840	43
AK809	Forefoot for 31840	44
AK810	Fan for 31840	45
73947	Supporter Off Fan for 31840	46
AP810	Alarm Controller & Indicator Light for 31840	47
AP811	Float Switch for 31840	48