Parts Breakdown

Model RS-CN-0700 41469

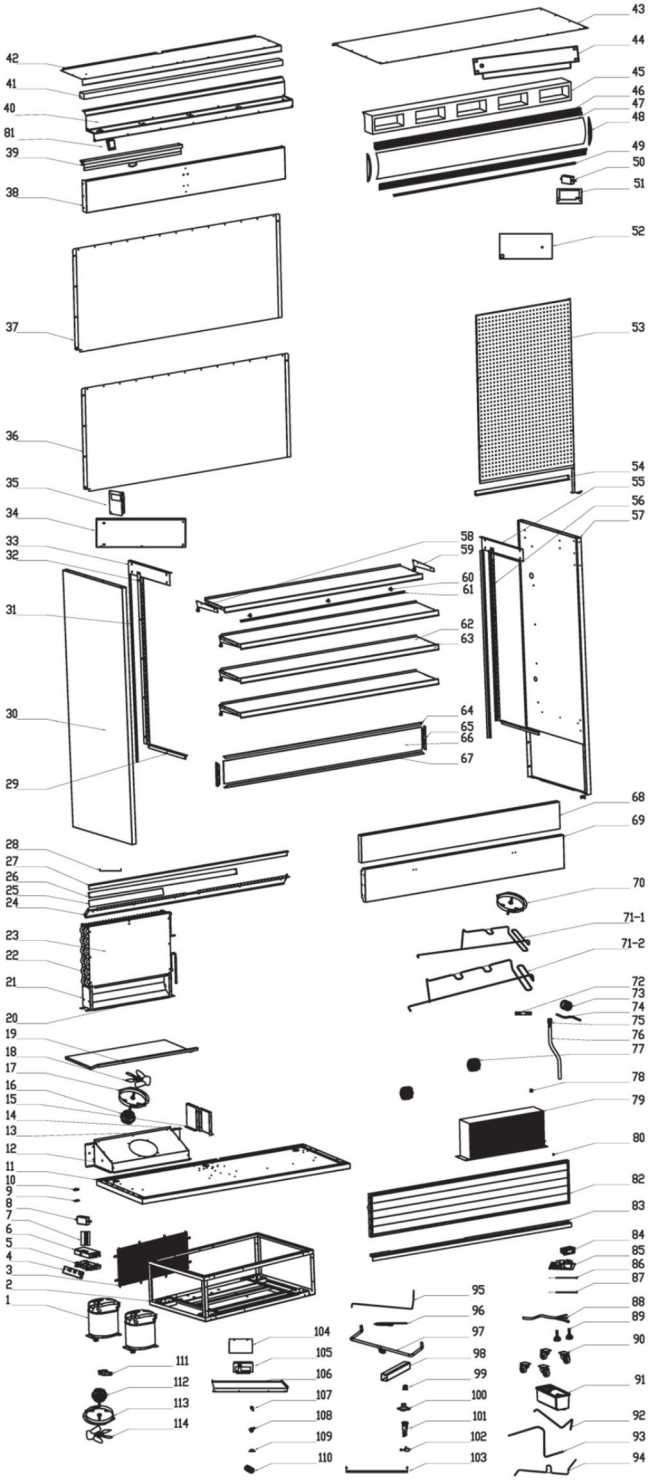

Parts Breakdown

Model RS-CN-0700 41469

Item No.	Description	Position
AP414	Compressor (R290) for 41469	1
AP415	Base for 41469	2
70133	Mesh Guard in Base for 41469	3
AO860	Wiring Box for 41469	4
61167	Circuit Board Box for 41469	5
60594	Cover of Circuit Board Box for 41469	6
AO861	Cap of Juncting Box for 41469	7
AO862	LED Transformer for 41469	8, 50
60676	Wire Clip Holder for 41469	9
60677	Wire Clip Cover for 41469	10
67653	Foam of Base Plate for 41469	11
60680	Left Board of Evaporator Cover for 41469	12
70154	Evaporator Cover for 41469	13
60681	Left Plate of Evaporator Motor for 41469	14
60684	Middle Support Pillar of Air Intake for 41469	15
AO892	Evaporator Fan Motor for 41469	16, 77
60641	Fan Guard for 41469	17, 70
60640	Fan Blade for 41469	18
AO893	Plate of Left/Right Air Intake for 41469	19
67654	Evaporator Ventilation Damper for 41469	20
60604	Evaporator Holder for 41469	21
AP416	Evaporator for 41469	22
67655	Evaporator Damper for 41469	23
67656	Evaporator Wind Screen for 41469	24
70153	Lower Front Baffle Assembly for 41469	25
70120	Rear Foam Baffle for 41469	26
70143	Back Upper Crosspiece for 41469	27
AO865	Filter Pressure Plate for 41469	28
60610	Parry of Lower Air Intake for 41469	29
AO866	Foam of Left Side Board for 41469	30
60613	Dead Plate of Rear Foam for 41469	31
AO867	Left Support Pillar of Shelf for 41469	32
60615	Parry of Right Lining Plate for 41469	33
AP417	Condensator Right Windshield for 41469	34
AP418	Left Windshield of Condenser for 41469	35
AO896	Lower Back Plate for 41469	36
AO897	Upper Back Plate for 41469	37
AO898	Upper Front Board for 41469	38
66104	Night Curtain for 41469	39
AO899	Damper of Upper Air Outlet for 41469	40
67660	Honeycomb Panel for 41469	41
AO900	Cover of Upper Air Outlet for 41469	42
AP419	Upper Cover Plate for 41469	43
AO902	The Left of the Evaporator Water Box for 41469	44
60698	Lining Foam for 41469	45
70141	Lampshade Frame for 41469	46
70142	Lampshade for 41469	47
60628	Holder of Lampshade Frame for 41469	48
AO903	Constant Voltage Patch LED Advertising Board Light for 41469	49
68392	Water Box Bracket for 41469	51
60655	Water Box for 41469	52
AO904	Ventilated Board for 41469	53
67662	Back Support for Board at Air Intake for 41469	54
60629	Parry of Right Lining Plate for 41469	55
AO877	Right Support Pillar of Shelf for 41469	56
AO878	Foam of Right Board for 41469	57
AO905	Left/Right Support Pillar of Shelf for 41469	58, 59
AD500	Jump Ring of LED for 41469	60
AO906	Constant Voltage Patch LED Light for 41469	61
AO907	General Assembly for Shelves for 41469	62
67665	Price Tag Holder for 41469	63
70151	Decorating Strip of Glass Deflector for 41469	64
70149	Strip of Glass Deflector 2 for 41469	65
67666	Glass Deflector for 41469	66
60645	Strip of Glass Deflector for 41469	67
67667	PE for Lower Board for 41469	68
AO908	Lower Front Board for 41469	69
AP420	Right High Voltage Evaporating Pipe for 41469	71--1
AP421	Left High Voltage Evaporating Pipe for 41469	71--2
AO890	Drainage Pipe Bracket for 41469	72
70106	Dry Filter for 41469	73
AP422	Joint Pipe of Dry Filter for 41469	74
AL576	Drain Joint for 41469	75
60668	Drain Pipe for 41469	76
60633	Side Plate Connector for 41469	78
AP423	Condenser for 41469	79
68301	Strong Magnet for 41469	80
AR485	Switch (Higher Amp) for 41469	81
AO910	Switch Cover for 41469	82
70127	Lower Front Waling for 41469	83
67648	Temperature Display for 41469	84
AP424	Main Circuit Board used on a Dual compressor (Please provide SN# if used on a single compressor)	85
60666	Temperature Probe for 41469	86
AO887	Defrost Probe for 41469	87
AO911	Power Cord for 41469	88
60672	Feet for 41469	89
AL357	Castor without Brake for 41469	90

Parts Breakdown

Model RS-CN-0700 41469

Item No.	Description	Position
67651	Water Connection Box Component for 41469	91
AP425	Connecting Tube for Right Condenser and Dry Filter for 41469	92
AP426	Connecting Tube for Left Condenser and Dry Filter for 41469	93
AP427	Right Air Return Duct for 41469	94
AP428	Left Air Return Duct for 41469	95
AP429	Tee Joint for 41469	96
AO888	PVC Tube for 41469	97
60590	PVC Trucking for 41469	98

Item No.	Description	Position
60670	PPR Tube Strap for 41469	99
79304	Pipe for Evaporated Water for 41469	100
AO889	Water Pipe for 41469	101
AL376	Circlip for 41469	102
60652	High Pressure Evaporation Tube Pressure Plate for 41469	103
AP430	Baffle Board of Evaporator Motor for 41469	104
AP403	Switch Display Bracket for 41469	105
AP431	Top Baffle Board of Condenser for 41469	106

Item No.	Description	Position
AL306	Pagoda Water Mouth-Processing for 41469	107
68398	Copper Connection for 41469	108
60669	Pressing Plate of Dry Filter for 41469	109
AP432	WAGO Wire Connector for 41469	110
AP433	American Plug for 41469	111
70111	Fan Motor for 41469	112
60932	Fan Guard for 41469	113
60933	Fan Blade for 41469	114