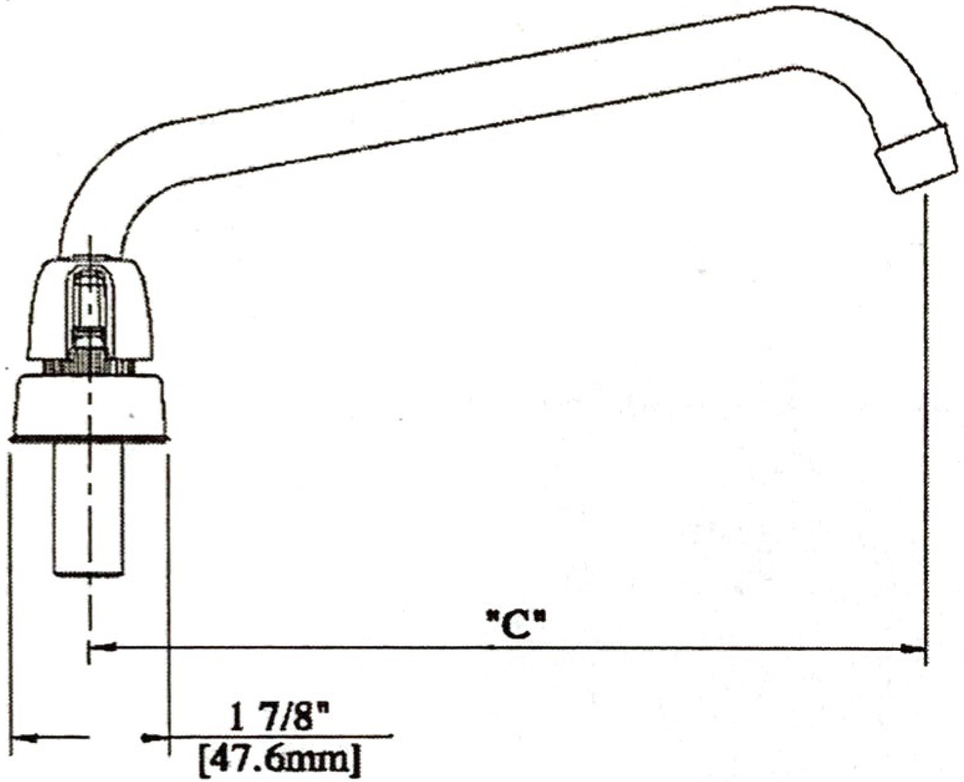

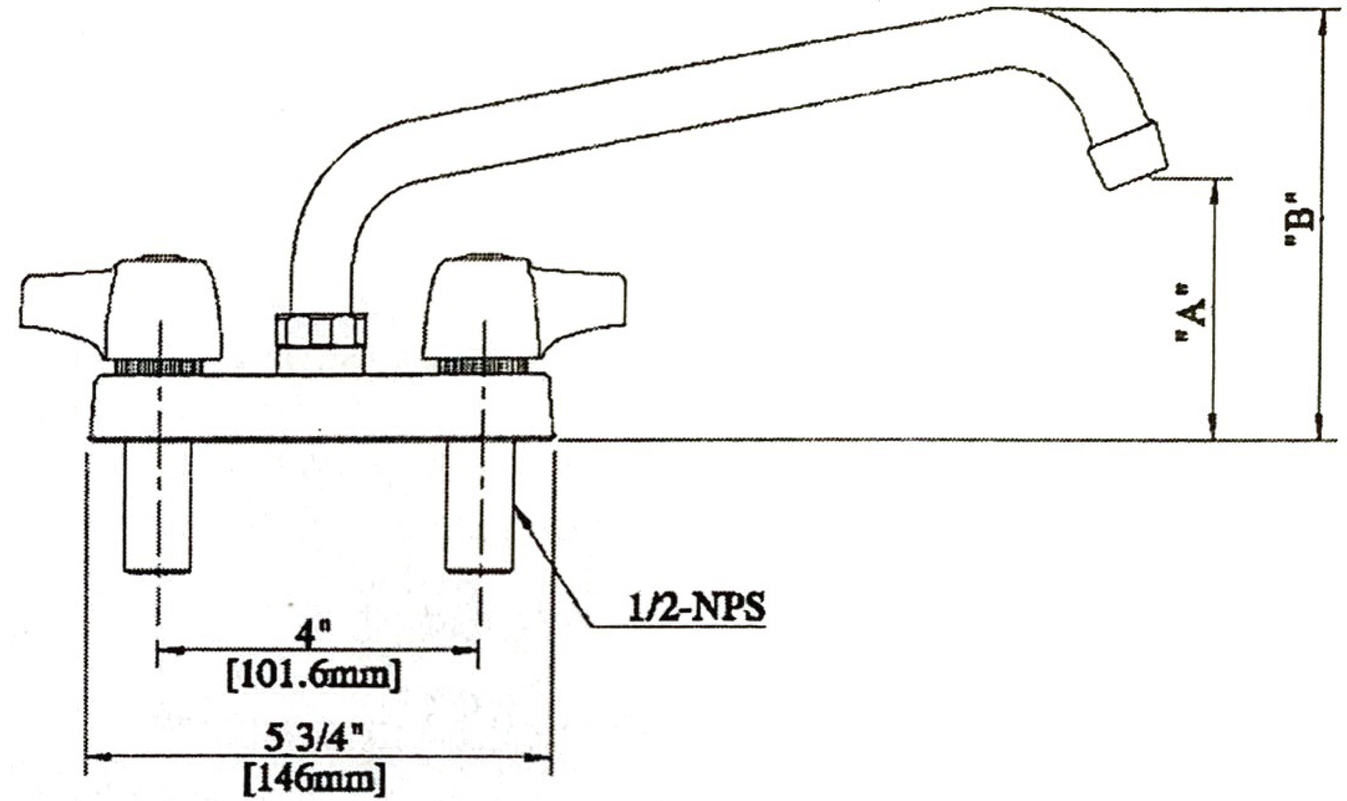

DIM"A"	DIM"B"	DIM"C"
2 11/16" [68.3mm]	4 7/8" [123.8mm]	10" [254mm]